Region 19 Current and Target Network Designs

AS19 As-Is Design

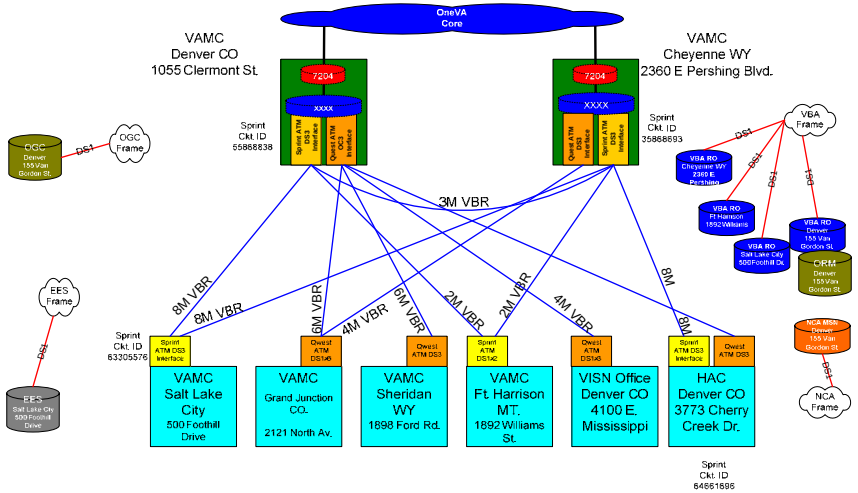

AS19 To-Be Design

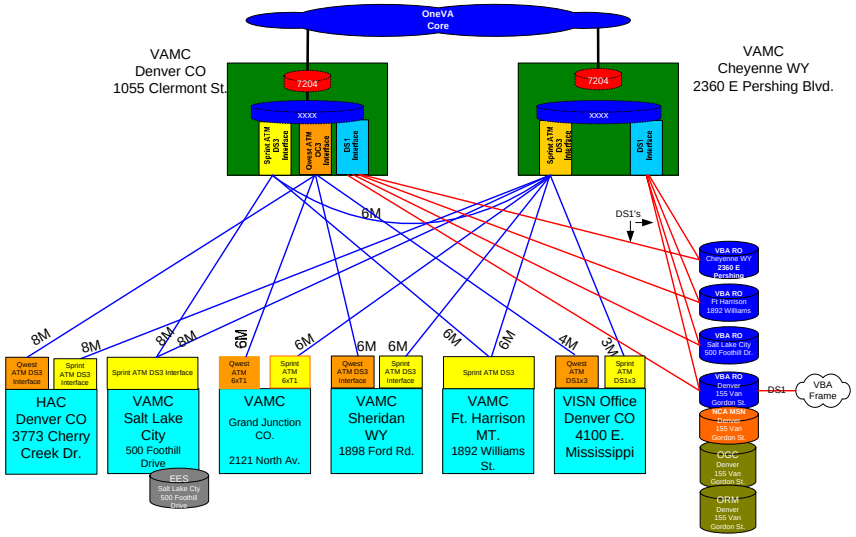

Revision Date: 5/5/2005