Outpatient Pharmacy (PSO)

Technical Manual/Security Guide

Version 7.0

December 1997

(Revised June 2020)

Department of Veterans Affairs (VA)

Office of Information and Technology (OIT)

Revision History

When updates occur, the Title Page lists the new revised date and this page describes the changes. Bookmarks link the described content changes to its place within manual. There are no bookmarks for format updates. Page numbers change with each update; therefore, they are not included as a reference in the Revision History.

Date	Patch	Description
06/2020	PSO*7*546	• Added new routines `PSOUTOR` and `PSOUTOR1` • Added the Medication Status Check supervisor function • Updated Title page, Revision History, Table of Contents, Index, and Footers Liberty ITS; D. Kruse – Dev, J. Smith – TW
07/2019	PSO*7*528	Changed name of the TRICARE CHAMPVA Bypass/Override Report (pp. 20, 34, 39, 42). (Mark Dawson)
03/2019	PSO*7*522	Updated Appendix A section B: Processing Rules - Deleted the text, "event type O01" and "event type O02"; and corrected the RDS message from "Pharmacy Encoded Order Message" to "Pharmacy Encoded Order/Treatment Dispense Message". Updated Appendix A section B:Transaction Specifications, subsection "Specific Transaction - Dispense Request" - corrected RDS-O01 references, the implemented message type is RDS-O13 (Todd Jackson, Halfaker)
02/2019	PSO*7*481	Added the new menu option for PSO*7*481, Non-VA Provider Import, to the PSO Maintenance Menu which is under the Outpatient Pharmacy Manager. Added the new option Non-VA Provider Inactivate to Standalone Options. Routine List updated. (D. Kruse, Developer)
11/2018	PSO*7*452	Added a summary of Data Dictionary changes introduced by this patch. Added routines PSODIR4, PSODEMSB, PSOEOPNW, and PSOSUCAT to the Routine List. Added the PSO CLINICAL ALERT ENTER/EDIT template to the Templates section. (G. Miller, PM; N. Muller, Tech Writer)
11/2018	PS0*7*508	Added new Patch Details for Inbound ePrescribing (PSO*7.0*508) to Intro, pg1; Added PSO*7*508 documents to related manuals pg3; Updated Security Keys: PSO ERX ADV TECH, PSO ERX TECH, pg18 *** PSDRPH, pg32a PSO ERX TECH,pg32b PSO ERX VIEW, pg32c; Appendix G. Updated IEP Protocols; Removed PSO*7.0*508 reference from Inbound ePrescribing Remote Procedures; Updated Fig 5. IEP Process Flow v3.0, pg146; Removed New and Modified labels from Inbound ePrescribing Protocols, p147 and Inbound ePrescribing, pg148: Holding Queue File (File #52.49), p149 ; External Patient File (File #52.46), p152a ; EXTERNAL PHARMACY FILE (#52.47), pg152b EXTERNAL PERSON (File #52.48), pg153a ;SERVICE REASON CODES (File #52.45) lists, p153b; Updated Outpatient Pharmacy: PRESCRIPTION FILE (File #52), p153c; and OUTPATIENT SITE (File #59), pg154.

Date	Patch	Description
11/2018	PSO*7*517	Routine added PSO7P517 (p.13) (B. Fisher, Dev; Gina Scorca, TW)
08/2018	PSO*7*482	Added one routine (PSOPTC0) to list of routines (p. 13).
08/2018	PSO*7*505	Clinical Ancillary Services updates: Updates to ORC HL7 segment. Added definition for ORC-30, Authorization mode. (B. Fisher, Dev; E. Cook, TW)
05/2018	PSO*7*463	Added technical components pertaining to the HAPE EDI Revenue Enhancements patch PSO*7*463 and updated the Routine List (PG. 13, 36) (E. Gustafson, Developer)
04/2018	PSO*7*502	Updates for ScripTalk enhancement: ScripTalk Printer 508 & OIT Compliance update throughout (H. Chipman, SQA)
02/2018	PSO*7*500	Routine deleted: PSODGAL (S. Soldan, PM; B. Hyde, TW)
02/2018	PSO*7*402	Routines added: PSO7P402, PSODOSU4 (S. Soldan, PM; B. Hyde, TW)
01/2018	PSO*7*497	Data Dictionary Updates, Index (Ellen Lott, TW)
12/2017	PSO*7*467	Adding PSO*7*467 information (Connolly)
04/2017	PSO*7*472	Added New Patch Details for Native Domain Standardization Medication Patch PSO*7*472, Data Dictionary Update. (D.D. Requirements Analyst)
02/2017	PSO*7*465	Added the Confidential Address and revised the Temporary Address. (G. Werner TW)
12/2016	PSO*7*454	Added new OneVA Pharmacy routines; updated sections and added information about the new OneVA Pharmacy label; added Data Base Integration Agreement, added new External packages: eMI, HDR/CDS Repository; added Appendix for OneVA Pharmacy HL7-eMI-HDR/CDS Repository & HL7-eMI-VistA messaging; updated Table of Contents to include changes; updated revision date for December 2016; Updated Index. (K. Coupland TW)

Date	Patch	Description
08/2016	PSO*7*451	Routines added: PSOASAP, PSOSPMA3, PSOSPMB3, PSOSPMKY, PSOSPMU0, PSOSPMU2, PSOSPMU3 Added PSO SPMP ADMIN Security Key entry Update the Outpatient Pharmacy Menu Diagrams Kogan, PM; W. Porter, TW)
06/2016	PSO*7*448	Updated Title Page to current OI&T standards Updated routine list; added the menu option Pharmacy Productivity/Revenue Report; added Electronic Claims Management Engine (ECME) to the External Relations table. (T. Tarleton, PM; T. Rollins, TW)
04/2016	PSO*7*411	Updated Routine List with routines PSOCROC, PSODGAL3, PSONEWOA, PSONEWOC, and PSOOCKV1. (H. Cross, PM, Regina Lule, TW)

Date	Patch	Description
08/2014	PSO*7*408	Updated [PSO AUTOQUEUE JOBS] option Files added to OP: (#58.4) SPMP ASAP RECORD DEFINITION, (#58.41) SPMP STATE PARAMETERS, (#58.42) SPMP EXPORT BATCH Routines added: PSO408PI, PSOASAP0, PSORTSUT, PSOSPML0, PSOSPML1, PSOSPML2, PSOSPML3, PSOSPML4, PSOSPML5, PSOSPML6, PSOSPMSP, PSOSPMU1, PSOSPMUT Added new Supervisor Functions menu option: State Prescription Monitoring Program Menu with option names Updated the Glossary Added Appendix E: Outpatient Pharmacy ASAP Standard for Prescription Monitoring Programs (PMP) Updated Index (Y. Olinger, PM; J. Owczarzak, TW)
08/2014	PSO*7*313	Added new routine PSOOTMRX (Y. Olinger, PM; J. Owczarzak, TW)
05/2014	PSO*7*423	Updated PID-11 documentation, updated RDX segment example, updated Expense Notes & Dispensing Provider, updated RXD-9 documentation. (G. Werner, Developer; A. Scott, PM; R. Sutton, TW)
03/2014	PSO*7*372 PSO*7*416	Renumber all pages Updated Revision History and Table of Contents. Added to the Related Manuals Update Index (C. Powell, PM; S. Heiress, TW)
01/2014	PSO*7*434	Two documentation updates: The *active* Veteran's Health Identity Card (VHIC) number was added to the PID segment (PID-4) on the VistA side. Format: [VIC Card #]~~~USVHA&&0363~PI~VA FACILITY ID&742V1&L The Outpatient Pharmacy Automation Interface (OPAI) has been changed to delimit the text on the pharmacy warning labels, correcting the problem in which text from one warning label runs into the text of another warning label. (Ed Zeigler, Lead Developer; Susan Strack, Technical Writer)

Date	Patch	Description
11/2013	PSO*7*421	Changed graphic from VA Seal to VistA logo; changed layout for cover page. Update other front matter including TOC, revision history, etc. Update routine count. Add new routines: PSO7P421, PSOBPSSL Add PSO EPHARMACY SITE MANAGER to security keys (added twice to document). (S. Spence/S. Taubenfeld, PM; K. McGarghan, TW)
05/2013	PSO*7*391	Added new routine PSOPKIV2 to the list of routines. PSDRPH key added to Security key section. (N. Goyal, PM; J. Owczarzak, TW)
01/2013	PSO*7*390	Update Revision History Added option Automate Internet Refill that was missed in the manual for PSO*7*264 Add new routines: PSODGAL2, PSODDPR7, PSODDPR8 Add menu option; Check Drug Interaction Added BSA & CrCL to the Glossary (G. Tucker, PM; S. Heiress, TW)
09/2012	PSO*7*386	Added description of patch's new security key PSO TECH ADV and modifications to the HOLD/UNHOLD functionality. (N. Goyal, PM; J. Owczarzak, TW)
03/2012	PSO*7*367	Added routine PSOFDAUT. Updated NTE Segment listing. (N. Goyal, PM; B. Thomas, TW)
03/2012	PSO*7*354	Added new menu option Enter/Edit Automated Dispensing Devices Updated list of files with file 52.53 Added file 52.53 to file security section Added new menu option Enter/Edit Automated Dispensing Devices Added RXD-13 Dispense-To location (N. Goyal, PM; J. Owczarzak, TW)
02/2012	PSO*7*385	Removed "TRICARE" from file 52.87 name Changed name of PSO TRICARE and PSO TRICARE MGR security keys to PSO TRICARE/CHAMPVA and PSO TRICARE/CHAMPVA MGR respectively. Updated ePharmacy Menu with correct menu items Added Advanced Beneficiary Notice Code for ePharmacy Rx in Appendix A references (S. Spence, PM; B. Tomlin, TW)
02/2012	PSO*7*354	Updated list of files with file 52.53 (N. Goyal, PM; J. Owczarzak, TW)
09/2011	PSO*7*382	Added routine PSOMPHRC. (N. Goyal, PM; J. Owczarzak, TW)

Date	Patch	Description
04/2011	PSO*7*343	Added routine PSOFDAMG. (T. Leggett, PM; B. Thomas, TW)
04/2011	PSO*7*316	Removed routine PSOQUAP. Documentation released with PSO*7*343. (G. Pickwood, DM; D. Dertien, TW)
04/2011	PSO*7*251	Updated the Table of Contents. Change the number of files from 24 to 26. Added the following routines per Bill Tatum, developer for PRE: PSO251PO, PSOCPPRE, PSODDPR1, PSODDPR2, PSODDPR3, PSODDPR4, PSODDPR5, PSODDPRE, PSODGAL1, PSODGDGP, PSODOSCL, PSODOSUN, PSODOSUT, PSOORROC, PSODOSU2, PSOVRPT. Added information under Callable Routines section. And Removed links and added references under the External Interfaces. Updated the External Relations table Change the number of files from 24 to 26. Changed menu item Process Drug/Drug Interactions to Process Order Checks. Removed heading and information under Routine Mapping. (B. Tatum, Developer, M. Colyvas & S. Heiress, TW)
11/2010	PSO*7*358	Update routine list, security keys, file list, and options for the Bypass/Override functionality and added in the TRICARE Active Duty Release. (S. Spence, PM; Jon Bolas, TW)
06/2010	PSO*7*348	Added routines PSORLST & PSORLST2; added options Prescription List for Drug Warnings and List of Patients/ Prescriptions for Recall Notice in Output Reports menu; (N. Goyal, PM; E. Phelps, TW)
10/2009	PSO*7*326	Added routine PSOPATLK. (E. Wright, PM; S. B. Scudder, TW)
08/2009	PSO*7*320	Added routines PSORMRX, PSORMRXD, and PSORMRXP. (G. Tucker, PM; S. B. Scudder, TW)
08/2009	PSO*7*311	Deleted Pharmacy Patient Non-VA Meds Report/Clean-up menu. Scott, PM; T. Dawson, TW)
07/2009	PSO*7*289	Added files, routines, and the NDC Validation and ePharmacy Site Parameter options to the list. (M. Anthony, PM; G. O'Connor, S. B. Scudder, TWs)
01/2009	PSO*7*305	Added routine PSOATRFC. Extended the PSOAUTRF security key description. Added the Privacy Notification element to the NTE segment. (G. Tucker, PM; S. B. Scudder, TW)

Date	Patch	Description
08/2008	PSO*7*225	The following changes are included in this patch. New routines have been added: PSOCAN3N, PSOHLSN3, PSOORFI5, PSOORFI6, PSOORFL, PSOORRL3, PSOORRLN, and PSOORRLO. Special Escaping Characters information has been added. (S. Templeton, PM; S. B. Scudder, TW)
07/2008	PSO*7*279	Update for the addition of the PSOAUTRF key. (A. Scott, PM; T. Dawson, TW)
06/2008	PSO*7*288	Update for the new menu option [Pharmacy Patient Non-VA Meds Report/Clean-up]. (A. Scott, PM, T. Dawson, TW)
05/2008	PSO*7*294	Update Routine List with routines PSOQ0076, PSOQ0186, PSOQ0236, PSOQ0496, PSOQ0595, PSOQCF04, PSOQMCAL, PSOQRART, PSOQTIU4, PSOQUAP, PSOQUAP2, and PSOQUTIL. (S. Templeton, PM; S. B. Scudder, TW)
10/2007	PSO*7*260	Updated Routine List with routines PSO260PI, PSOBPSR1, PSOBPSRP, PSOBPSU1, PSOBPSU2, PSONVAVW, PSOPMP0, PSOPMP1, PSOPMPPF, and PSOREJP3. Updated menu listing with new ePharmacy menu options. (S. Spence, PM; S. Krakosky, TW)
10/2007	PSO*7*264	Re-numbered pages; removed section heading numbering. Updated Routine List with routines: PSOATRD, PSOATRF, PSOATRF1, PSOATRP, PSOATRPP, PSOATRR, and PSORESUS. Updated menu listing with new option. (E. Williamson, PM; S. Krakosky, TW)

Table of Contents

Introduction **1**

Orientation **3**

Online Documentation 3

Related Manuals 3

Implementation and Maintenance **5**

Resource Requirements 5

Options to be Deleted during Installation 6

Templates to be Deleted during Installation 7

Routines to be Deleted during Installation 7

M Audiofax (Telephone Refill Requests) 8

Setting up the Bingo Board Device 8

Mail Group Setup for the HL7 External Interface 8

Using the Maintenance Menu 8

Maintenance (Outpatient Pharmacy) [PSO MAINTENANCE] menu *9*

Queue Background Jobs 9

Files **11**

Outpatient Pharmacy Files 11

EPIP Outpatient Pharmacy Remediation, Patch PSO*7.0*452 Data Dictionary Update 12

Native Domain Standardization Medication Patch PSO*7*472, PSO*7*497, Data Dictionary Update 12

Description: *12*

Patch Components *12*

Routine List **14**

Exported Options **19**

Menu Assignments 19

Security Keys 19

Package Security 21

Archiving and Purging **22**

Setting up the Archive Device 22

Callable Routines **23**

External Interfaces **23**

Steps for Startup/Shutdown of the External Interface 23

External Relations **26**

Data Base Integration Agreements (IAs) 27

Internal Relations **28**

Package-Wide Variables **28**

Templates **30**
Software Product Security **32**
Mail Group Setup for the HL7 External Interface 32
Archiving/Purging 32
Interfacing 32
Electronic Signatures 32
Menu Assignments 32
Security Keys 32
File Security 34
Outpatient Pharmacy V. 7.0 Menu Diagrams **36**
Outpatient Pharmacy Manager 36
Pharmacist Menu 41
Pharmacy Technician's Menu 42
Standalone Options 42
Journaling Globals **45**
Barcodes and Label Printer Support **45**
Barcodes on Dot Matrix Printers 45
New Label Stock (Version 6.0 and Later Versions) – Dot Matrix Labels 46
Laser Label Printers 48
Hardware Setup *48*
Sample Control Code Entries *49*
VMS Print Queue Setup *51*
Control Codes *52*
ScripTalk® Printers *53*
Glossary **57**
Appendix A: Outpatient Pharmacy HL7 Interface Specifications **59**
A. General Information 59
Introduction *59*
Message Rules *59*
Segment Rules *59*
Field Rules *60*
Special Escaping Characters *60*
B. Transaction Specifications 61
Communication Protocol *61*
Processing Rules *61*
Specific Transaction – Dispense Request *62*
Active Veteran's Health Information Card (VHIC) Numbers Added to PID-4 Segment: *63*
Specific Transaction – Dispense Release Date/Time *72*
Specific Transaction – Dispense Completion *75*
Appendix B: HL7 Messaging with an External System **79**
New Protocol 79

New Application Parameter 79
New Logical Link 79
HL7 Order Message Segment Definition Table 80
Order Messaging Exceptions 83
Appendix C: 85
Appendix D: HL7 Messaging for VistA Data Extraction Framework (VDEF) 87
New Protocols 87
New Application Parameters 88
New Logical Link 88
HL7 Outpatient Pharmacy VDEF Message 88
HL7 Outpatient Pharmacy VDEF Message 89
Appendix E: Outpatient Pharmacy ASAP Standard for Prescription Monitoring Programs (PMP) 106
Introduction 106
Safety Updates for Medication Prescription Management (SUMPM) Patch *7*408 – State Prescription Drug Monitoring Program 107
ASAP Segment Hierarchy Layout 108
SPMP Data Source (PSO*7*408) 109
Appendix F: OneVA Pharmacy HL7 Messaging using middleware application for External System 127
OneVA Pharmacy General Information 127
OneVA Pharmacy New Menu 128
OneVA Pharmacy New Logical Link 128
OneVA Pharmacy New Flag 128
OneVA Pharmacy Modified Protocols 129
OneVA Pharmacy New Protocols 129
OneVA Pharmacy New Application Parameters 130
New Fields on Existing Files 130
OneVA Pharmacy New File 130
OneVA Pharmacy Component Diagram 131
OneVA Pharmacy HL7 Message Types 134
QBP^Q13 Query by Parameter Request 134
RTB^K13 Prescription Query Service Reponses 135
RDS^O13 Pharmacy/Treatment Dispense Message Request 139
RRD^O14 Prescription Refill/Partial Services Response 141
OneVA Pharmacy Messaging Exceptions 144
Appendix G: Inbound ePrescribing (IEP) 146
Inbound ePrescribing Process Flow 146
Inbound ePrescribing Protocols 148

Inbound ePrescribing Remote Procedures 149
Inbound ePrescribing Menu Option 150
Inbound ePrescribing Holding Queue File (File #52.49) 150
Inbound ePrescribing External Patient File (File #52.46) 153
Inbound ePrescribing External Pharmacy File (#52.47) 153
Inbound ePrescribing External Person (File #52.48) 154
Inbound ePrescribing New Field in Existing File 155

Index 157

Table of Figures

Figure 1: Dispensing VistA Instance to HDR/CDS Repository 131
Figure 2: Business Capability Processed for OneVA Pharmacy Patch 132
Figure 3: Processing Sequence of Events and Message Type 133
Figure 4: Dispense Order from another VA Pharmacy Location Functionality 133
Figure 5: Inbound ePrescribing Process Flow (Version 3.0) 148

Introduction

This document briefly describes the technical and security aspects of Outpatient Pharmacy V.7.0. It is intended for members of the Automated Data Processing (ADP)/Information Resources Management Service (IRMS) staff who has had experience with other Veterans Health Information Systems and Technology Architecture (VistA) software and has worked or will work with a package coordinator who is familiar with the functions of the Outpatient Pharmacy V.7.0 in a VA Medical Center. Readers without this background are referred to the documentation for the Kernel, the VA FileMan and the User's Manual for this release.

The Outpatient Pharmacy V.7.0 package provides a method for managing the medications given to veterans who have visited a clinic or who have received prescriptions upon discharge from the hospital. Prescription labels are automatically generated and refill request forms are printed. Medication histories are kept online to permit checks for potential interactions. Profiles can be generated to assist the clinician in managing the patient's medication regimen. Management reports aid the pharmacy in controlling inventory and costs.

A number of site parameters allow the individual Department of Veterans Affairs Medical Center (VAMC) to customize the package to meet local needs. The User's Manual describes these site parameters and the ways they influence the operation of the package.

Effective with the OneVA Pharmacy Patch PSO*7.0*454 (December 2016), Pharmacists are able to dispense prescriptions that originated in other VistA host sites. The OneVA Pharmacy User Manual and Installation Guide describe the site parameter required to use this functionality.

Effective with the Inbound ePrescribing Patch PSO*7.0*467 (December 13, 2017), pharmacists are able to receive and process prescriptions that originated from external providers. The Inbound ePrescribing User Manual, Installation Guide, and Implementation Guide describe the site parameters required to use this functionality.

Effective with the Inbound ePrescribing Patch PSO*7.0*508 (October 2018), pharmacists are able to receive and process prescriptions that originated from external providers. The Inbound ePrescribing User Manual, Installation Guide, and Implementation Guide describe the site parameters required to use this functionality.

See External Relations Section of this manual for a listing of software not included in this package that must be installed before this version of Outpatient Pharmacy is fully functional.

(This page included for two-sided copying.)

Orientation

Online Documentation

Throughout the entire Outpatient Pharmacy V. 7.0 package, enter a question mark (?) to obtain online information to assist in choosing actions at any prompt. Where examples of screen dialogs are given, user responses are shown as bolded text.

Additional information about this package is contained in help prompts and comments, which are available online. Detailed information can also be obtained by using the Kernel routine XINDEX to produce detailed listings of the routines and by using the VA FileMan to generate listings of data dictionaries for the files.

The Data Dictionaries (DDs) are considered part of the online documentation for this software application. Use VA FileMan *List File Attributes* [DILIST] option, under the *Data Dictionary Utilities* [DI DDU] option, to print the DDs.

Related Manuals

Outpatient Pharmacy V. 7.0 Release Notes
Outpatient Pharmacy V. 7.0 User Manual
Computerized Patient Record System V. 1.0 Installation Guide
Computerized Patient Record System V. 1.0 Set-up Guide
Pharmacy Ordering Enhancements (POE) Phase 2 Release Notes
Outpatient Medication Copay Release Notes
Laser Printed Prescription Labels with PMI Sheets Phase I Release Notes
ScripTalk® Talking Prescription Labels Installation Guide
Herbal/OTC/Non-VA Meds Documentation Release Notes
VistA Data Extraction Framework (VDEF) Installation & User Configuration Guide
Pharmacy Re-Engineering (PRE) Application Program Interface (API) Manual
Dosing Order Check User Manual
VistA to MOCHA Interface Document
Installation Guide – OneVA Pharmacy
Release Notes – OneVA Pharmacy
User Manual – OneVA Pharmacy
*Release Notes – Inbound ePrescribing (PSO*7*467)*
*Installation Guide – Inbound ePrescribing (PSO*7*467)*
*User Manual – Inbound ePrescribing (PSO*7*467)*
Pharmacy Re-Engineering (PRE) Installation Guide – Inbound ePrescribing (PSO*7*508)
Pharmacy Re-Engineering (PRE) Release Notes – Inbound ePrescribing (PSO*7*508)
Pharmacy Re-Engineering (PRE) User Guide – Inbound ePrescribing (PSO*7*508)
Technical Manual/Security Guide - Outpatient Pharmacy V.7.0'

(This page included for two-sided copying.)

Implementation and Maintenance

Resource Requirements

Outpatient Pharmacy V. 7.0 contains approximately 850 routines including all PSO* routines and compiled templates, PSOX* and APSPT* that take up approximately 3.76MB disk space.

Response Time monitor hooks have been placed in the following routines:

Routine	Purpose
PSON52	File New Prescriptions in File (#52)
PSORN52	File Renewed Prescriptions in File (#52)
PSOR52	File Refill Prescriptions in File (#52)

This package requires 28 files (see "Files" section in this manual). A typical site may require the following disk space:

1 Mbyte	DRUG file (#50) (4000 entries)
3 Mbytes per month	DRUG COST file (#50.9) (800 items dispensed by 200 dispensing physicians)
150 Mbytes	PRESCRIPTION file (#52) (500,000 prescriptions)
50 Mbytes	PHARMACY PATIENT file (#55) (500,000 prescriptions)
About 1 to 2 Mbytes	Routines and the other files (except for RX VERIFY file (#52.4), RX SUSPENSE file (#52.5), and PHARMACY ARCHIVE file (#52.8))
3 to 5 Mbytes of "swing space"	RX VERIFY file (#52.4), RX SUSPENSE file (#52.5), and PHARMACY ARCHIVE file (#52.8)

Outpatient Pharmacy V. 7.0 may be expected to require about 350 Mbytes of disk space. The actual disk utilization will, of course, depend primarily on the size of the three large files —PRESCRIPTION file (#52), PHARMACY PATIENT file (#55) and DRUG COST file (#50.9).

The requirements for Video Display Terminals (VDTs) and printers also depend on the number of transactions Outpatient Pharmacy V. 7.0 performs. Approximately three VDTs and one printer are needed for each 500 prescriptions (or fraction of 500) issued each day. If mail-out refills are handled separately, at least one VDT and one printer for each 500 refills are required. An additional VDT and a printer may be desired in the supervisor's office, and 1 VDT in the office of people who are assigned to consult with patients about their medication regimens.

There are no special device requirements for dot matrix labels except to print barcodes on labels. In this case, the label printer must be able to print barcodes and must be able to be set to a form length of either 4 inches or 24 lines. The section in this document on barcodes provides additional information about this function.

Laser printed labels require one or more specially configured printers. The printer must be able to print to a legal length form and must print barcodes. In addition, the printer must support Hewlett Packard's Printer Control Language (PCL) version 5 or greater.

Note: The OneVA Pharmacy Patch PSO*7*454 introduced the OneVA Pharmacy label-generation functionality with new/updated label routines. In order to print the OneVA Pharmacy label, each site must use a standard VistA laser label printer and label stock. The printer must be able to print a legal length form and must print barcodes. In addition, the printer must support Hewlett Packard's Printer Control Language (PCL) version 5 or greater. For additional information related to the label stock go to the VA Software Document Library (VDL), select the Clinical section then choose the "Pharm: Outpatient Pharmacy" page. Locate the "User Manual – Supplemental – Outpatient Pharmacy" document and refer to the section titled "Laser Labels Phase II (PSO*7*161) and FY07 Q2 Release (PSO*7*200)."

Note: The barcode printed on the OneVA Pharmacy label will contain the host site information where the prescription order originated.

Options to be Deleted during Installation

Note: The options listed below are deleted on the initial installation of Outpatient Pharmacy V. 7.0. No options are deleted after the initial installation, up to patch PSO*7*46.

Option Name	Menu Text
PSO DRUG	Drug Enter/Edit
PSO DRUGMENU	Drug/Drug Interaction Functions
PSO HOLDRX	Hold Rx
PSO INTERACTION	Drug Interactions Menu
PSO INTERACTION LOCAL ADD	Enter/Edit Local Drug Interaction
PSO INTERACTION SEVERITY	Edit Drug Interaction Severity
PSO LAB MONITOR	Mark/Unmark Lab Monitor Drugs
PSO NEW	New Prescription Entry
PSO REF	Refill Prescriptions
PSO RXEDIT	Edit Prescriptions
PSO RXHOLD	Hold Features
PSO RXPAR	Partial Prescription
PSO SIGED	Medication Instruction File Add/Edit

PSO UNHOLDRX	Unhold Rx
PSO FACILITY SETUP	Enter Facility Data for Clozapine
PSO MARK DRUG	Mark Clozapine Drug
PSOL UNMARK DRUG	Unmark Clozapine Drug
PSOARCCO	Find
PSOARCHLIST	List One Patient's Archived Rxs
PSOARCIN	Tape Retrieval
PSOARCPURGE	Purge
PSOARCSV	Save

Templates to be Deleted during Installation

Note: The templates listed below are deleted on the initial installation of Outpatient Pharmacy V. 7.0. No options are deleted after the initial installation up to patch PSO*7*46.

Input	**File**
PSO DRUG	#50
PSO SIGED	#51
PSO BATCH PARTIAL	#52
Print	**File**
PSO ACTION PROFILE #3	#44
PSOBJP	#52
Sort:	**File**
PSOBJP	#52

Routines to be Deleted during Installation

Note: The routines listed below are deleted on the initial installation of Outpatient Pharmacy V. 7.0. No options are deleted after the initial installation up to patch PSO*7*46.

PSOCLDRG	PSOCLUS1	PSOCLUS2	PSOCLUS3	PSOCSRL1
PSOCSTAR	PSODRUG	PSOGMINS	PSOGMP12	PSOGMP25
PSOLIST	PSONODIB	PSONUM	PSOPOST3	PSOPRE
PSORX	PSORXPAR			

Prior to the initial installation of Outpatient Pharmacy V. 7.0, it is recommended that all PSO* routines be deleted using the system utility to delete routines. Back up local modifications to any PSO* routines.

After installation of Outpatient Pharmacy V. 7.0, compare routines to note the changes between locally modified routines and the V. 7.0 routines. Take care when installing local modifications as Outpatient Pharmacy V. 7.0 has been modified greatly with patch PSO*7*46.

M Audiofax (Telephone Refill Requests)

If telephone refill requests are processed using M Audiofax, a new VEXRX routine must be installed to interface with Outpatient Pharmacy V. 7.0. To install this routine, go to SHOP ALL on FORUM and in the TELEPHONE REFILL REQUESTS Basket, retrieve the message "VEXRX for Outpatient V. 7." This message will contain the new VEXRX routine. This routine must be forwarded and installed on the production account.

*****Important*****

Telephone refill requests (M Audiofax) cannot be processed without the new VEXRX routine.

Setting up the Bingo Board Device

A dedicated device must be set up for use with the bingo board. The device setup is similar to that used to set up a printer, except the sub-type will be C-VT. Only devices with the sub-type C-VT will be allowed for entry at the "DISPLAY DEVICE" prompt in the *Enter/Edit Display* [PSO BINGO ENTER/EDIT DISPLAY] option found on the *Bingo Board Manager* [PSO BINGO MANAGER] menu. For further information, see the site's systems guide for information on setting up the device. Once a dedicated device is set up, the bingo board can be scheduled to automatically start and/or stop at user-defined times.

Mail Group Setup for the HL7 External Interface

A mail group and device **must** be set up in order to run the HL7 external interface. The recommended name of the mail group is PSO HLGROUP1. The recommended device name is PSO HLDEVICE1.

Using the Maintenance Menu

The *Maintenance (Outpatient Pharmacy)* [PSO MAINTENANCE] menu is used for implementation as well as maintenance of the Outpatient Pharmacy V. 7.0 package. The first five options, *Site Parameter Enter/Edit* [PSO SITE PARAMETERS] (example follows), *Edit Provider* [PSO PROVIDER EDIT], *Add New Providers* [PSO PROVIDER ADD], *Queue Background Jobs* [PSO AUTOQUEUE JOBS], and *Autocancel Rx's on Admission* [PSO AUTOCANCEL1] are used for implementation. The remaining options on this menu may be used for maintenance. (An example is given below for the *Queue Background Jobs* [PSO AUTOQUEUE JOBS] option. See the Outpatient Pharmacy V. 7.0 User Manual for an explanation of the other options on this menu.)

Maintenance (Outpatient Pharmacy) [PSO MAINTENANCE] menu

Site Parameter Enter/Edit
Edit Provider
Add New Providers
Queue Background Jobs
Autocancel Rx's on Admission
Bingo Board Manager ...
Edit Data for a Patient in the Clozapine Program
Enter/Edit Clinic Sort Groups
Initialize Rx Cost Statistics
Edit Pharmacy Intervention
Delete Intervention
Auto-delete from Suspense
Automate Internet Refill
Delete a Prescription
Enter/Edit Automated Dispensing Devices
Expire Prescriptions
Manual Auto Expire Rxs
Non-VA Provider Import
Prescription Cost Update
Purge Drug Cost Data
Purge External Batches
Recompile AMIS Data

Queue Background Jobs
[PSO AUTOQUEUE JOBS]

This option is used to queue all background jobs. Once the *Queue Background Jobs* [PSO AUTOQUEUE JOBS] option is selected, the option automatically pre-selects the jobs. Entering "E" for exit will not exit the option. An up arrow (^) must be entered to exit a specific job and go on to the next one. The background jobs are as follows:

- Autocancel Rx's on Admission
- Nightly Rx Cost Compile
- Nightly Management Data Compile
- Compile AMIS Data (NIGHT JOB)
- Expire Prescriptions
- Auto-delete from Suspense
- Scheduled SPMP Data Export

A date and time at least 2 minutes in the future must be entered. The jobs should be set to run at a time convenient for the site.

Note: The options listed above must be scheduled to run through the *Queue Background Jobs* [PSO AUTOQUEUE JOBS] option. Attempting to run them from any other option will cause problems.

Only the following prompts require responses. All others will be left blank.

QUEUED TO RUN AT WHAT TIME:	This is the date/time desired for TaskMan to start this option.
RESCHEDULING FREQUENCY:	If this field is blank then the job will run only once.

The *Scheduled SPMP Data Export* [PSO SPMP SCHEDULED EXPORT] nightly background job option can also be scheduled via the *Schedule/Unschedule* [XUTM SCHEDULE] option.

Note: When the background job fails to transmit the data to the state, a MailMan message is generated and sent to the subscribers of the PSO SPMP NOTIFICATIONS mail group.

Example: View of Queue Background Jobs Screen

```
Select Maintenance (Outpatient Pharmacy) Option: QUEue Background Jobs

If time to run option is current do not edit.
Autocancel System Parameter must be set to 'YES'
before prescriptions are discontinued.
```

```
Edit Option Schedule
    Option Name: PSO AUTOCANCEL
    Menu Text: Autocancel on Admission                    TASK ID: 2617405
  ____________________________________________________________________________

  QUEUED TO RUN AT WHAT TIME: JUN 13,2000@01:00

DEVICE FOR QUEUED JOB OUTPUT: PP6;P-OTHER;132;64

 QUEUED TO RUN ON VOLUME SET:

      RESCHEDULING FREQUENCY: 1D

             TASK PARAMETERS:

            SPECIAL QUEUEING:
_____________________________________________________________________________
COMMAND:                                    Press <PF1>H for help    Insert
```

These default values are highlighted on the screen display, not to indicate user input.

Files

This package requires the 28 files listed below. Information about the files can be obtained by using the VA FileMan to generate a list of file attributes.

The Data Dictionaries (DDs) are considered part of the online documentation for this software application. Use the VA FileMan *List File Attributes* [DILIST] option, under the *Data Dictionary Utilities* [DI DDU] option, to print the DDs. The following are the files for which DDs should be printed:

Outpatient Pharmacy Files

FILE #	NAME	UP DATE DD	SEND SEC. CODE	DATA COMES W/FILE	SITE DATA	RSLV PTS	USER OVER RIDE
50.073	DUE QUESTIONNAIRE	YES	YES	NO			
50.0731	DUE ANSWER SHEET	YES	YES	NO			
50.0732	DUE QUESTION	YES	YES	NO			
50.0733	DUE SECTION	YES	YES	NO			
50.9	DRUG COST	YES	YES	NO			
52	PRESCRIPTION	YES	YES	NO			
52.09	REMOTE PRESCRIPTION LOG	YES	YES	NO			
52.11	PATIENT NOTIFICATION (Rx READY)	YES	YES	NO			
52.4	RX VERIFY	YES	YES	NO			
52.41	PENDING OUTPATIENT ORDERS	YES	YES	NO			
52.43	PRESCRIPTION REFILL REQUEST	YES	YES	NO			
52.45	ERX SERVICE REASON CODES	YES	YES	NO			
52.46	ERX EXTERNAL PATIENT	YES	YES	NO			
52.47	ERX EXTERNAL PHARMACY	YES	YES	NO			
52.48	ERX EXTERNAL PERSON	YES	YES	NO			
52.49	ERX HOLDING QUEUE	YES	YES	NO			
52.5	RX SUSPENSE	YES	YES	NO			
52.51	PHARMACY EXTERNAL INTERFACE	YES	NO	NO			
52.52	CLOZAPINE PRESCRIPTION OVERRIDES	YES	YES	NO			
52.53	PHARMACY AUTOMATED DISPENSING DEVICES	YES	YES	NO			
52.8	PHARMACY ARCHIVE	YES	YES	NO			
52.86	EPHARMACY SITE PARAMETERS	YES	YES	NO			
52.87	PSO AUDIT LOG	YES	YES	NO			
52.9	PHARMACY PRINTED QUEUE	YES	YES	NO			
52.91	TPB ELIGIBILITY	YES	NO	NO			
52.92	TPB INSTITUTION LETTERS	YES	YES	NO			
53	RX PATIENT STATUS	YES	YES	NO			
58.4	SPMP ASAP RECORD DEFINITION						
58.41	SPMP STATE PARAMETERS						
58.42	SPMP EXPORT BATCH						
59	OUTPATIENT SITE	YES	YES	NO			
59.1	OUTPATIENT AMIS DATA	YES	YES	NO			
59.12	OUTPATIENT PHARMACY MANAGEMENT DATA	YES	YES	NO			
59.2	WAITING TIME	YES	YES	NO			
59.3	GROUP DISPLAY	YES	NO	NO			
59.8	OUTPATIENT CLINIC SORT GROUP	YES	YES	NO			

The namespace for the Outpatient Pharmacy V. 7.0 package is PSO.

EPIP Outpatient Pharmacy Remediation, Patch PSO*7.0*452
Data Dictionary Update

PSO*7.0*452 enables a new warning message that is sent to members of the new PHARMACY SUPERVISORS MailMan group, notifying recipients that one or more Outpatient Pharmacy sites are approaching the upper limit of the defined prescription numbering series. The new warning is intended to prevent an unintentional shutdown of prescription processing that will occur if the pharmacy reaches the upper limit of the numbering series. For additional information about the early warning message, refer to the *Outpatient Pharmacy (PSO) Manager's User Manual*.

This patch is delivered with companion patch PSS*1.0*215, which adds a new RX# UPPER BOUND WARNING LIMIT field (#48) to the PHARMACY SYSTEM file (#59.7). The value stored in this field determines when the early warning message is sent. If no custom value is entered in this field, then the message will be sent when 1000 numbers remain in the series. For more information about this Data Dictionary change, refer to the *Pharmacy Data Management Technical Manual/Security Guide*.

PSO*7.0*452 also adds a Clinical Alert that displays in the header area with patient demographic information when using certain Outpatient Pharmacy [PSO] options. Pharmacy Supervisors can use the Clinical Alert to make Pharmacy staff aware of information such as drug interactions or the patient's participation in clinical trials. For more information about Clinical Alerts, refer to the *Outpatient Pharmacy (PSO) Manager's User Manual*.

The companion patch PSS*1.0*215 adds a CLINICAL ALERT multiple field (#109) to the PHARMACY PATIENT file (#55). This field stores the date and time of the alert and provides a free-text field for the alert text. For more information about this Data Dictionary change, refer to the *Pharmacy Data Management Technical Manual/Security Guide*.

Native Domain Standardization Medication Patch PSO*7*472, PSO*7*497, Data Dictionary Update
Description:

This patch will add a new field Coding System multiple to files DRUG INGREDIENTS (#50.416), VA GENERIC (#50.6), VA PRODUCT (#50.68), VA DRUG CLASS (#50.605) for the purpose of interoperability.

DRUG INGREDIENTS (#50.416) file shall be updated to include a new field multiple to store the RXNORM / UNII codes from the respective Standards Development Organizations.

VA GENERIC (#50.6) file shall be updated to include a new field multiple to store the RXNORM / UNII codes from the respective Standards Development Organizations.

VA PRODUCT (#50.68) file shall be updated to include a new field multiple to store the RXNORM code from the Standards Development Organization.

VA DRUG CLASS (#50.605) file shall be updated to include a new field multiple to store the RXNORM / UNII codes from the respective Standards Development Organizations.

Patch Components

Table 1: Files & Fields Associated

File Name (Number)	Field Name (Number)	New/Modified/Deleted
DRUG INGREDIENTS (#50.6)	CODING SYSTEM (#5)_	Modified

VA PRODUCT (#50.68)	CODING SYSTEM (#43)	New
VA DRUG CLASS (#50.605)	CODING SYSTEM (#5)	New

Routine List

The following routine list for Outpatient Pharmacy appears when the new routine set is loaded. Each routine's first line contains a brief description of the routine's function. Use the First Line Routine Print [XU FIRST LINE PRINT] option to print a list of just the first line of each PSO* routine.

- PSO5241
- PSO5252
- PSO525AP
- PSO5291
- PSO52AP1
- PSO52API
- PSO52B
- PSO52CLR
- PSO52EX
- PSO53
- PSO55FX2
- PSO55FX3
- PSO59
- PSO7P517
- PSOADDR
- PSOAMIS
- PSOAMIS0
- PSOAMIS1
- PSOARC
- PSOARCCO
- PSOARCCV
- PSOARCDE
- PSOARCF1
- PSOARCF2
- PSOARCF3
- PSOARCF4
- PSOARCF5
- PSOARCF6
- PSOARCIN
- PSOARCLT
- PSOARCR1
- PSOARCR2
- PSOARCRR
- PSOARCS2
- PSOARCSV
- PSOARCTG
- PSOARCTP
- PSOARX
- PSOARX1
- PSOASAP
- PSOASAP0
- PSOATRD
- PSOATRF
- PSOATRF1
- PSOATRFC
- PSOATRP
- PSOATRPP
- PSOATRR
- PSOAUTOC
- PSOB
- PSOBAI
- PSOBAIR2
- PSOBAIRP
- PSOBARV
- PSOBBC
- PSOBGMG1
- PSOBGMG2
- PSOBGMG3
- PSOBGMGR
- PSOBING1
- PSOBINGO
- PSOBKDE1
- PSOBKDED
- PSOBMST
- PSOBORP0
- PSOBORP1
- PSOBORP2
- PSOBORP3
- PSOBPSR1
- PSOBPSRP
- PSOBPSSL
- PSOBPSSP
- PSOBPSU1
- PSOBPSU2
- PSOBPSU3
- PSOBPSUT
- PSOBRPRT
- PSOBSET
- PSOBSET1
- PSOBUILD
- PSOCAN
- PSOCAN1
- PSOCAN2
- PSOCAN3
- PSOCAN3N
- PSOCAN4
- PSOCIDC1
- PSOCIDC2
- PSOCIDC3
- PSOCIDC4
- PSOCIDC7
- PSOCIDC8
- PSOCIDC9
- PSOCLEAN
- PSOCLERK
- PSOCLO1
- PSOCLOLS
- PSOCLUTL
- PSOCMOP
- PSOCMOPA
- PSOCMOPB
- PSOCMOPC
- PSOCMOPR
- PSOCMOPT
- PSOCOPAY
- PSOCOST
- PSOCOSTP
- PSOCP
- PSOCP1
- PSOCPA
- PSOCPB
- PSOCPBA2
- PSOCPBAK
- PSOCPBK1
- PSOCPBK2
- PSOCPBK3
- PSOCPBK4
- PSOCPBK5
- PSOCPC
- PSOCPD
- PSOCPDUP
- PSOCPE
- PSOCPF
- PSOCPF1
- PSOCPF2
- PSOCPIB
- PSOCPIB3
- PSOCPIB4
- PSOCPIB5
- PSOCPIBC
- PSOCPIBF
- PSOCPPRE
- PSOCPTRH
- PSOCPTRI
- PSOCPVW
- PSOCROC
- PSOCSRL
- PSOCST
- PSOCST10
- PSOCST11
- PSOCST12
- PSOCST2
- PSOCST3
- PSOCST4
- PSOCST5
- PSOCST6
- PSOCST7
- PSOCST8
- PSOCST9
- PSOCSTD
- PSOCSTM
- PSOCSTX
- PSODACT
- PSODAWUT
- PSODDPR1
- PSODDPR2
- PSODDPR3
- PSODDPR4
- PSODDPR5
- PSODDPR7
- PSODDPR8
- PSODDPRE
- PSODEA
- PSODEDT
- PSODELI
- PSODEM
- PSODEMSB
- PSODGAL1
- PSODGAL2
- PSODGAL3
- PSODGDG1
- PSODGDG2
- PSODGDGI
- PSODGDGP
- PSODI
- PSODIAG
- PSODIR
- PSODIR1
- PSODIR2
- PSODIR3
- PSODIR4
- PSODISP
- PSODISP1
- PSODISP2
- PSODISP3
- PSODISPS
- PSODIV
- PSODLKP
- PSODOSCL
- PSODOSU2
- PSODOSU4
- PSODOSUN
- PSODOSUT
- PSODP
- PSODPT
- PSODRDU1
- PSODRDU2
- PSODRDUP
- PSODRG
- PSODRGN
- PSODSPL
- PSODSRC
- PSODUE
- PSOECMC2
- PSOECMP2
- PSOECMPS
- PSOELPS2
- PSOELPST
- PSOEN145
- PSOEOPNW

- PSOERX
- PSOERX1
- PSOERX1A
- PSOERX1B
- PSOERX1C
- PSOERXA0
- PSOERXA1
- PSOERXA2
- PSOERXA3
- PSOERXA4
- PSOERXD1
- PSOERXD2
- PSOERXH1
- PSOERXO1
- PSOERXP1
- PSOERXR1
- PSOERXU1
- PSOERXU4
- PSOERXX1
- PSOERXX2
- PSOERXX3
- PSOERXX4
- PSOERXX5
- PSOEXBCH
- PSOEXDT
- PSOEXREF
- PSOEXRST
- PSOFDAMG
- PSOFDAUT
- PSOFSIG
- PSOFTDR
- PSOFUNC
- PSOHCPRS
- PSOHCSUM
- PSOHDR
- PSOHELP
- PSOHELP1
- PSOHELP2
- PSOHELP3
- PSOHELP4
- PSOHLD
- PSOHLDA
- PSOHLDC
- PSOHLDI1
- PSOHLDIS
- PSOHLDS
- PSOHLDS1
- PSOHLDS2
- PSOHLDS3
- PSOHLDS4
- PSOHLEXC
- PSOHLEXP
- PSOHLINC
- PSOHLINL
- PSOHLNE1
- PSOHLNE2
- PSOHLNE3
- PSOHLNE4
- PSOHLNEW
- PSOHLPII
- PSOHLPIS
- PSOHLSG
- PSOHLSG1
- PSOHLSG2
- PSOHLSG3
- PSOHLSG4
- PSOHLSG5
- PSOHLSIG
- PSOHLSIH
- PSOHLSN
- PSOHLSN1
- PSOHLSN2
- PSOHLSN3
- PSOHLSNC
- PSOHLUP
- PSOHLUP1
- PSOICDA
- PSOIOS
- PSOLAB
- PSOLBL
- PSOLBL1
- PSOLBL2
- PSOLBL3
- PSOLBL4
- PSOLBLD
- PSOLBLD1
- PSOLBLN
- PSOLBLN1
- PSOLBLN2
- PSOLBLS
- PSOLBLT
- PSOLLL1
- PSOLLL2
- PSOLLL3
- PSOLLL4
- PSOLLL5
- PSOLLL6
- PSOLLL7
- PSOLLL8
- PSOLLL9
- PSOLLLH
- PSOLLLHN
- PSOLLLI
- PSOLLLW
- PSOLLU1
- PSOLLU2
- PSOLLU3
- PSOLLU4
- PSOLMAL
- PSOLMAO
- PSOLMDA
- PSOLMLST
- PSOLMPAT
- PSOLMPF
- PSOLMPI
- PSOLMPO
- PSOLMPO1
- PSOLMPO2
- PSOLMRN
- PSOLMUTL
- PSOLSET
- PSOMAUEX
- PSOMGCM1
- PSOMGCOM
- PSOMGM31
- PSOMGMN1
- PSOMGMN2
- PSOMGMN3
- PSOMGMN4
- PSOMGMRP
- PSOMGR31
- PSOMGREP
- PSOMGRP1
- PSOMGRP2
- PSOMGRP3
- PSOMGRP4
- PSOMHV1
- PSOMLLD2
- PSOMLLDT
- PSOMPHRC
- PSON52
- PSONCPD1
- PSONCPD2
- PSONCPD3
- PSONCPDP
- PSONDCUT
- PSONDCV
- PSONEW
- PSONEW1
- PSONEW2
- PSONEW3
- PSONEWF
- PSONEWG
- PSONEWOA
- PSONEWOC
- PSONFI
- PSONGR
- PSONRXN
- PSONTEG
- PSONVAR1
- PSONVARP
- PSONVAVW
- PSONVNEW
- PSOOCKV1
- PSOORAL
- PSOORAL1
- PSOORAL2
- PSOORAPI
- PSOORCPY
- PSOORDA
- PSOORDER
- PSOORDRG
- PSOORED1
- PSOORED2
- PSOORED3
- PSOORED4
- PSOORED5
- PSOORED6
- PSOORED7
- PSOOREDT
- PSOOREDX
- PSOORFI1
- PSOORFI2
- PSOORFI3
- PSOORFI4
- PSOORFI5
- PSOORFI6
- PSOORFIN
- PSOORFL
- PSOORNE1
- PSOORNE2
- PSOORNE3
- PSOORNE4
- PSOORNE5
- PSOORNE6
- PSOORNEW
- PSOORNW1
- PSOORNW2
- PSOORRD2
- PSOORRDI
- PSOORRL
- PSOORRL1
- PSOORRL3
- PSOORRLN
- PSOORRLO
- PSOORRNW
- PSOORROC
- PSOORUT1
- PSOORUT2
- PSOORUT3
- PSOORUTL
- PSOOTMRX
- PSOP
- PSOP1
- PSOP2
- PSOP288F
- PSOP288R
- PSOPAT
- PSOPATLK
- PSOPFSU0
- PSOPFSU1
- PSOPI136
- PSOPKIV1
- PSOPKIV2
- PSOPMP0
- PSOPMP1
- PSOPMPPF
- PSOPOLY
- PSOPOS10
- PSOPOS12

- PSOPOS13
- PSOPOST
- PSOPOST1
- PSOPOST2
- PSOPOST3
- PSOPOST4
- PSOPOST5
- PSOPOST6
- PSOPOST7
- PSOPOST8
- PSOPOST9
- PSOPRA
- PSOPRF
- PSOPRFSS
- PSOPRI
- PSOPROD1
- PSOPROD2
- PSOPRVW
- PSOPST68
- PSOPTC0
- PSOPTPST
- PSOPXRM1
- PSOPXRMI
- PSOPXRMU
- PSOQ0076
- PSOQ0186
- PSOQ0236
- PSOQ0496
- PSOQ0595
- PSOQCF04
- PSOQMCAL
- PSOQRART
- PSOQTIU4
- PSOQUAP2
- PSOQUTIL
- PSOR52
- PSORDS
- PSOREF
- PSOREF0
- PSOREF1
- PSOREF2
- PSOREJP0
- PSOREJP1
- PSOREJP2
- PSOREJP3
- PSOREJP4
- PSOREJP5
- PSOREJU1
- PSOREJU2
- PSOREJU3
- PSOREJU4
- PSOREJUT
- PSORELD1
- PSORELDT
- PSORENW
- PSORENW0
- PSORENW1
- PSORENW2
- PSORENW3
- PSORENW4
- PSORESK
- PSORESK1
- PSORESUS
- PSORFL
- PSORLLL1
- PSORLLL2
- PSORLLL3
- PSORLLL4
- PSORLLL5
- PSORLLLH
- PSORLLLI
- PSORLST
- PSORLST2
- PSORMRX
- PSORMRXD
- PSORMRXP
- PSORN52
- PSORN52A
- PSORN52C
- PSORN52D
- PSOROS
- PSORPTS
- PSORPTS1
- PSORRD
- PSORREF
- PSORREF0
- PSORREF1
- PSORRP
- PSORRPA1
- PSORRX1
- PSORRX2
- PSORTSUT
- PSORWRAP
- PSORX1
- PSORXCLE
- PSORXDL
- PSORXED
- PSORXED1
- PSORXEDT
- PSORXI
- PSORXL
- PSORXL1
- PSORXLAB
- PSORXPA1
- PSORXPR
- PSORXPR1
- PSORXRP1
- PSORXRP2
- PSORXRPT
- PSORXVW
- PSORXVW1
- PSORXVW2
- PSOSD
- PSOSD0
- PSOSD1
- PSOSD2
- PSOSD3
- PSOSDP
- PSOSDRAP
- PSOSIG
- PSOSIGCX
- PSOSIGDS
- PSOSIGMX
- PSOSIGNO
- PSOSIGTX
- PSOSITED
- PSOSPMA3
- PSOSPMB3
- PSOSPMKY
- PSOSPML0
- PSOSPML1
- PSOSPML2
- PSOSPML3
- PSOSPML4
- PSOSPML5
- PSOSPML6
- PSOSPMSP
- PSOSPMU0
- PSOSPMU1
- PSOSPMU2
- PSOSPMU3
- PSOSPMUT
- PSOSPSIG
- PSOSUBCH
- PSOSUCAT
- PSOSUCH1
- PSOSUCHG
- PSOSUCLE
- PSOSUDCN
- PSOSUDEL
- PSOSUDP1
- PSOSUDP2
- PSOSUDPR
- PSOSUINV
- PSOSULB1
- PSOSULBL
- PSOSULOG
- PSOSUP
- PSOSUPAT
- PSOSUPOE
- PSOSUPRX
- PSOSURST
- PSOSUSRP
- PSOSUTL
- PSOSUTL1
- PSOTALK
- PSOTALK1
- PSOTALK2
- PSOTALK3
- PSOTEXP1
- PSOTPCAN
- PSOTPCEE
- PSOTPCL
- PSOTPCLP
- PSOTPCLR
- PSOTPCLW
- PSOTPCRP
- PSOTPCRX
- PSOTPCUL
- PSOTPENV
- PSOTPHL1
- PSOTPHL2
- PSOTPINA
- PSOTPPOS
- PSOTPPRE
- PSOTPPRV
- PSOTPRP1
- PSOTPRX1
- PSOTRI
- PSOTRLBL
- PSOUT433
- PSOUTIL
- PSOUTL
- PSOUTLA
- PSOUTLA1
- PSOUTLA2
- PSOUTOR
- PSOUTOR1
- PSOVCNT
- PSOVDF1
- PSOVDF2
- PSOVDF3
- PSOVDFK
- PSOVER
- PSOVER1
- PSOVER2
- PSOVERC
- PSOVRPT
- PSOVWI
- PSOXR
- PSOXR1
- PSOXR10
- PSOXR11
- PSOXR12
- PSOXR13
- PSOXR14
- PSOXR15
- PSOXR16
- PSOXR17
- PSOXR18
- PSOXR19
- PSOXR2
- PSOXR20
- PSOXR21
- PSOXR22
- PSOXR3
- PSOXR4
- PSOXR5
- PSOXR6
- PSOXR7

- PSOXR8
- PSOXR9
- PSOXWRH
- PSOXWRN
- PSOXX
- PSOXZA
- PSOXZA1
- PSOXZA10
- PSOXZA11
- PSOXZA12
- PSOXZA13
- PSOXZA14
- PSOXZA15
- PSOXZA16
- PSOXZA17
- PSOXZA18
- PSOXZA2
- PSOXZA3
- PSOXZA4
- PSOXZA5
- PSOXZA6
- PSOXZA7
- PSOXZA8
- PSOXZA9
- PSONVAP2
- PSONVAP3
- PSONVAP4

Additional Information

Standards and Conventions Committee (SACC) Exemptions

The following PSO routines will generate errors reported in the XINDEX utility from using non-standard M syntax, due to the need to consume external web services:

PSOERXA1
PSOERXO1

The following waiver permits the use of this non-standard M syntax to allow the use of Cache features to consume external web services. This waiver is located in the HealtheVet Web Services Client (HWSC) Developer Guide.

OITIMB33554520 - Migration from M2J to VistA Web Services Client (VWSC)

Keywords	M2J,VWSC,J2EE
Decision Date	12/1/2006
Decision Type	Architecture
Decision Making Body	HPMO CCB
Description	On December 1, 2006, the HPMO Change Control Board voted to accept the migration of VistA from the current M2J solution to the VistA Web Services Client (VWSC). This decision was made for a number of reasons, in particular the fact that the existing 12-year-old M standard has been surpassed by evolving technologies and can no longer address today's requirements. Additionally, we are no longer required to support DSM, previously the primary VistA/M hosting environment. Today, all sites are standardized on Caché 5.0 systems. As such, approvals were granted as follows: Waiver of the requirement to adhere to the existing 1995 M standard (that does not address the implementation of web services); Implementation of an industry standard such as web services for VistA/M to J2EE calls using Caché's built in HTTP and web service client feature; Use of VWSC as an interim solution that ensures continuity of integration between VistA/M applications and migrated J2EE applications as HealtheVet evolves by enabling the consumption of external web services by legacy VistA applications; and Deprecation of the original M2J approach.
Rationale	This architectural change allows for a number of improvements, including better scalability, resilience, and performance. Deployment and configuration is far less complicated for administrators, and the APIs can be used by a variety of clients rather than solely M-based. It also places responsibility for support, maintenance, etc. with the vendor rather than OI&T.
Record Type	TDR
State	Approved
Date Submitted	2/14/2007 8:37:24 AM

Supporting Documentation

Link	Document Title	Description	Date

Download	Migration from M2J to VistA Web Services Client (VWSC) Email Notification	Email notification alerting of the decision	2/13/2007
Download	VWSC Architecture	Proposed architecture view of VWSC	12/1/2006
Download	VWSC Proposed View	Proposed logical view of VistA Web Services Client (VWSC)	12/1/2006

Exported Options

Menu Assignments

Unless menus have already been assigned, the *Outpatient Pharmacy Manager* [PSO MANAGER] menu should be assigned to the Package Coordinator for Outpatient Pharmacy. It should also be added to the menu of the Site Manager and any ADP/IRMS staff that the Package Coordinator selects to help in the operation of Outpatient Pharmacy. The *Pharmacist Menu* [PSO USER1] option should be assigned to all pharmacists and the *Pharmacy Technician's Menu* [PSO USER2] option should be assigned to all pharmacy technicians and other pharmacy personnel who may view prescriptions and/or inquire into other Outpatient Pharmacy V. 7.0 files.

Security Keys

PROVIDER	Holders of this key will be prompted for ICD-9 Diagnosis code entry.
PSDRPH	This key is assigned to users for accessing the Inbound ePrescribing (eRx) Holding Queue functionality. The key allows users to access all options in the eRx Holding Queue. This key also authorizes pharmacists to verify and dispense controlled substance prescription(s). Introduced by the Controlled Substances patch PSD*3*76. This key authorizes pharmacists to finish/verify a digitally signed Schedule II-V CS orders placed via CPRS. The PSDRPH security key should be given to registered Pharmacists working on controlled substances to honor Drug Enforcement Administration regulations, and should not be given to non-pharmacists except in cases where the package coordinator (ADPAC) is not a registered pharmacist.
PSORPH	This key is required to use all of the Outpatient Pharmacy V. 7.0 options. It should be assigned to all pharmacists, the package coordinator, and all appropriate members of the ADP/IRMS staff.
PSO ERX ADV TECH	This key was updated by patch PSO*7*508 for the Inbound eRx Holding Queue. The key allows users to Validate Patient/Provider/Drug/SIG, Accept Patient/Provider/Drug Validations, Reject, Hold/Un Hold, Search, Sort, Remove/UnRemove, and and Print Message View (MV), Acknowledge (ACK) – Refill Response, Refill Request (OP), Acknowledge (ACK) – Rx Cancel, Acknowledge (ACK) – Inbound Refill Error..
PSO ERX TECH	This key was updated by patch PSO*7*508 for the Inbound eRx Holding Queue functionality. The key allows users to Validate Patient/Provider/Drug/SIG, Hold/Un Hold, Search, Sort, and

	Print, Message View (MV), Acknowledge (ACK) – Refill Response, Refill Request (OP).
PSO ERX VIEW	This key was introduced by patch PSO*7*467 for the Inbound eRx Holding Queue functionality. The key allows users to Search, Sort, and View an eRx only.
PSO TECH ADV	This security key is used by pharmacy technicians to HOLD and UNHOLD prescriptions using a subset of the HOLD reasons available to PSORPH key holders.
PSO COPAY	This key is used to identify users to notify when a copay exemption cannot be determined at the time a prescription fill is released. Holders of this key are also notified any time the *Exempt Rx Patient Status from Copayment* [PSOCP EXEMPTION] option is used to change the copay exemption for an Rx Patient Status.
PSO REJECTS BACKGROUND MESSAGE	When prescriptions remain on the Third Party Payer Reject - Worklist over the specified number of days, the system will send a Mailman Message to holders of this key.
PSOA PURGE	***NOTE**: Disabled until further notice.* This key should be assigned to the package coordinator and/or any person who will be responsible for archiving prescriptions.
PSOLOCKCLOZ	This key is used to override the lockouts in the Clozapine options. All members of the Clozapine treatment team must be entered as users on the system and must be given this key. All pharmacists who have the ability to override the lockouts in this option must also hold this key. The Pharmacy Service representative of the Clozapine treatment team should identify these pharmacists.
PSOINTERFACE	This key is used to access the *External Interface Menu* [PSO EXTERNAL INTERFACE] option.
PSOAUTRF	This key allows the use of the Automate Internet Refill functionality and the Automate CPRS Refill functionality.
PSO TRICARE/CHAMPVA	This key is required to be able to do an override on TRICARE or CHAMPVA prescription.
PSO TRICARE/CHAMPVA MGR	This key is required to access the *TRICARE CHAMPVA Override Report* [PSO TRI CVA OVERRIDE REPORT] option
PSO EPHARMACY SITE MANAGER	This key is required to access the *PSO ePharmacy Site Parameters* [PSO ePHARM SITE PARAMETERS] option.

PSO SPMP ADMIN	This key is used by the Outpatient Pharmacy (OP) package to grant certain users administration privileges to perform configuration updates in the State Prescription Monitoring Program (SPMP) module.

Package Security

Electronic signatures may be established by using the *Electronic Signature code Edit* [XUSESIG] option.

In Kernel V. 8.0 the *Electronic Signature code Edit* [XUSESIG] option has been tied to the Common Options, under the *User's Toolbox* [XUSERTOOLS] submenu, for easy access by all users.

Archiving and Purging

Detailed information is kept for each prescription, including all information about the original prescription, all refills and all editing. An average prescription requires about 300 bytes (0.3 Kbytes) of disk storage. The archiving options under the manager's menu allow the package coordinator and IRMS/ADP staff to manage this file. Old prescriptions, typically those that have been expired or canceled for more than a year, can be saved to tape and then purged from online storage. NOTE: The purge options under the *Archive Menu* [PRCAK AR SUPERVISOR] option are out of order until further notice. The User's Manual describes the operation of these options. Because not all prescriptions require the same amount of space and because of the way the operating system utilizes the disk, do not expect to regain 300 bytes of disk storage for every prescription purged. As prescriptions are purged, all references to these prescriptions from other files are also deleted.

The RX SUSPENSE file (#52.5) holds information about all prescriptions that have been suspended for later printing. There is an automatic purge for this file for prescriptions printed from 7 to 90 days ago. The package coordinator can run the *Auto-delete from Suspense* [PSO PNDEL] option at regular intervals to purge this file of suspended prescriptions which have been printed 7 to 90 days ago. The purging is tasked to run every 7 days.

Specific entries can be deleted using the *Change Suspense Date* [PSO PNDCHG] or *Pull Early From Suspense* [PSO PNDRX] options.

Drug cost data can now be purged using the *Purge Drug Cost Data* [PSO PURGE DRUG COST] option.

Setting up the Archive Device

The following examples display archive device setups for file and tape.

These examples may differ from site to site. If a device differs, check with IRMS for information on device set up.

```
HOST FILE SERVER (HFS) DEVICE SETUP:


NAME: HFS   $I: ARC0797.TMP
ASK DEVICE: YES    ASK PARAMETERS: NO
VOLUME SET(CPU): VAA      QUEUING: ALLOWED
LOCATION OF TERMINAL: COMPUTER AREA      ASK HOST FILE: YES
ASK HFS I/O OPERATION: YES*MARGIN WIDTH: 132
*FORM FEED: #      *PAGE LENGTH: 64
*BACK SPACE: $C(8)  SUBTYPE: P-OTHER
TYPE: HOST FILE SERVER
```

```
BAUD RATE (c): UNKNOWN
MAGNETIC TAPE DEVICE SETUP:


NAME: TAPE (T7867) $I: $3$MKA600:
ASK DEVICE: YES    ASK PARAMETERS: YES
SIGN-ON/SYSTEM DEVICE: NO
LOCATION OF TERMINAL: COMPUTER ROOM
*MARGIN WIDTH: 255 *FORM FEED: #
*PAGE LENGTH: 256  *BACK SPACE: $C(8)
OPEN PARAMETERS: (FORMAT="VAL4":BLOCKSIZE=2048)
SUBTYPE: MAGTAPE   TYPE: MAGTAPE
PERFORM DEVICE CHECKING: NO
BAUD RATE (c): UNKNOWN
```

Callable Routines

Entry points provided by the Outpatient Pharmacy V. 7.0 package to other packages can be found in the External Relations section of this manual. No other routines are designated as callable from outside of this package. For additional information of other external calls and their entry points go to VA Software Document Library (VDL), see under the Clinical Section on the “Pharm: Outpatient Pharmacy” page. Choose the “API Manual: Pharmacy Reengineering (PRE).”

External Interfaces

For information on HL7 External Interface, go to VA Software Document Library (VDL), select the Infrastructure Section, then choose “HL7 (VistA Messaging).”

Note: The HL Logical Link Entry/Node set up for Outpatient Pharmacy V. 7.0 is PSO DISP. This is a new Logical Link installed with Patch PSO*7*156.

Note: The HL Logical Link Entry/Node set up for Outpatient Pharmacy V. 7.0 is PSORRXSEND. This is a new Logical Link installed with Patch PSO*7*454.

Steps for Startup/Shutdown of the External Interface

The following screens depict the steps necessary to startup and shutdown the external interface for Version 1.6 of the VistA Health Level Seven (HL7) application package. See Appendix A of this manual for more information on the Outpatient Pharmacy V. 7.0 HL7 Specification.

The following examples are options from the HL7 package. The top-level menu option being used is the HL MAIN MENU [*HL7 Main Menu*] option.

Example: Starting Up the Interface

```
Select OPTION NAME: HL MAIN MENU       HL7 Main Menu


          Event monitoring menu ...
          Systems Link Monitor
          Filer and Link Management Options ...
          Message Management Options ...
          Interface Developer Options ...
          Site Parameter Edit

Select HL7 Main Menu Option: Filer and Link Management Options


   SM     Systems Link Monitor
   FM     Monitor, Start, Stop Filers
   LM     TCP Link Manager Start/Stop
   SA     Stop All Messaging Background Processes
   RA     Restart/Start All Links and Filers
   DF     Default Filers Startup
   SL     Start/Stop Links
   PI     Ping (TCP Only)
   ED     Link Edit
   ER     Link Errors ...

Select Filer and Link Management Options Option: SL  Start/Stop Links

This option is used to launch the lower level protocol for the
appropriate device.  Please select the node with which you want
to communicate

Select HL LOGICAL LINK NODE: PSO DISP
The LLP was last shutdown on MAY 11, 2004 07:29:53.
This LLP has been enabled!
```

Example: Shutting Down the Interface

```
Select OPTION NAME: HL MAIN MENU       HL7 Main Menu


          Event monitoring menu ...
          Systems Link Monitor
          Filer and Link Management Options ...
          Message Management Options ...
          Interface Developer Options ...
          Site Parameter Edit

Select HL7 Main Menu Option: Filer and Link Management Options


   SM     Systems Link Monitor
   FM     Monitor, Start, Stop Filers
   LM     TCP Link Manager Start/Stop
   SA     Stop All Messaging Background Processes
   RA     Restart/Start All Links and Filers
   DF     Default Filers Startup
   SL     Start/Stop Links
   PI     Ping (TCP Only)
   ED     Link Edit
   ER     Link Errors ...

Select Filer and Link Management Options Option: SL  Start/Stop Links

This option is used to launch the lower level protocol for the
appropriate device.  Please select the node with which you want
to communicate

Select HL LOGICAL LINK NODE: PSO DISP
The LLP was last started on JUN 02, 2004 09:52:02.

Okay to shut down this job? YES
```

```
The job for the PSO DISP Lower Level Protocol will be shut down.
```

External Relations

The following software is not included in this package and must be installed before this version of Outpatient Pharmacy is completely functional.

Package	Minimum Version Needed
Accounts Receivable (AR)	4.5
Adverse Reaction Tracking (ART)	4.0
Clinical Information Resources Network (CIRN)	1.0
Consolidated Mail Outpatient Pharmacy (CMOP)	2.0
Computerized Patient Record System (CPRS)	3.0
Decision Support System (DSS)	3.0
Electronic Claims Management Engine (ECME)	1.0
Fee Basis	3.5
VA FileMan	22.0
HealtheVet Web Services Client (HWSC)	1.0
Integrated Funds Control, Accounting, and Procurement (IFCAP)	5.0
Inpatient Medications (IP)	5.0
Integrated Billing (IB)	2.0
Kernel	8.0
Laboratory	5.2
MailMan	7.1
Master Patient Index/Patient Demographics (MPI/PD)	1.0
National Drug File (NDF)	4.0
Order Entry/Results Reporting (OERR)	3.0
Patient Information Management System (PIMS)	5.3
Pharmacy Data Management (PDM)	1.0
Remote Procedure Call (RPC) Broker	1.1
VistALink	1.5
Enterprise Messaging Infrastructure (eMI) Enterprise Service Bus (ESB)	2.2
Health Data Repository/Clinical Data Service (HDR/CDS) Repository	3.14.1

Note: For Outpatient Medication Copay options to be fully functional, the Pharmacy Ordering Enhancement (POE) project software must be installed, which includes patches to Outpatient Pharmacy (PSO*7*46), Order Entry/Results Reporting (OR*3*94), Pharmacy Data Management (PSS*1*38), and Inpatient Medications (PSJ*5*50).

Note: For Clinical Indicator Data Capture (CIDC) to be fully functional, the Outpatient Pharmacy CIDC software (PSO*7*143) must be installed along with CPRS Version 25.

Note: The OneVA Pharmacy Patch PSO*7*454 introduces new functionality that allows for a pharmacist to remotely refill a prescription from another VistA instance. This patch utilizes Health Level 7 (HL7) messaging to send and receive remote prescription details from another VAMC. This allows a 'dispensing', or 'non-custodial' Pharmacy to refill a prescription that originated from another VA facility. The VA facility where the prescription exists is considered the 'host' facility. VistA utilizes HL7 to send a query message to middleware application. A middleware application is used to query the Health Data Repository/Clinical Data Service (HDR/CDS) Repository for all active medications from all sites. The medications are returned to the querying site. Once the prescriptions are received, they are displayed below any 'local' prescriptions within the Patient Prescription Processing [PSO LM BACKDOOR ORDERS] option sorted by facility. The pharmacist can then view the remote prescriptions and will be able to refill or partially fill any active prescriptions that are not considered controlled substances at either facility. To be fully functional, the site must be configured to middleware.

Data Base Integration Agreements (IAs)

Outpatient Pharmacy V. 7.0 has Data Base Integration Agreements (IAs) with the packages listed above, in addition to the following: Consolidated Mail Outpatient Pharmacy (CMOP), Drug Accountability (DA), Controlled Substances (CS), and Health Level Seven. For complete information regarding the IAs for Outpatient Pharmacy V. 7.0, please refer to the *Integration Agreement Menu* [DBA IA ISC] option under the *DBA* [DBA] option on FORUM.

Internal Relations

Very few of the options in this package can be invoked independently. Those that can be so invoked independently are

PSO MANAGER	Outpatient Pharmacy Manager
PSO P	Medication Profile
PSO USER1	Pharmacist Menu
PSO USER2	Pharmacy Technician's Menu
Any other option may not run independently.	

Any locally created menu which includes options from this package *must* have the ENTRY ACTION field read: D:'$D(PSOPAR) ^PSOLSET and should have the MENU EXIT ACTION field read: D FINAL^PSOLSET

Package-Wide Variables

The variables PSODIV, PSOINST, PSOIOS, PSOPAR, PSOPAR7, PSOSYS, PSOLAP, PSOPROP, PSOCLC, PSOCNT, PSODTCUT, PSOSITE, PSOPRPAS, PSOBAR0, PSOBAR1 and PSOBARS are used extensively throughout the package. They are set by the routine PSOLSET and are not killed until exiting from the package.

(This page included for two-sided copying.)

Templates

Sort	File
PSO COST STAT	50.9
PSO BBWAIT SORT	52.11
PSO DRUG LIST	50
PSO DRUG WARNINGS	52
PSO HOLD LIST	52
PSO INTERVENTIONS	9009032.4
PSO NARC LIST	52
PSOUPAT	52
Input	**File**
PSO CLINICAL ALERT ENTER/EDIT	55
PSO CLOZDRUG	50
PSO DISPLAY EDIT	59.3
PSO INTERACT	56
PSO INTERVENTION EDIT	9009032.4
PSO INTERVENTION NEW	9009032.4
PSO OUTPT	2
PSO OUTPTA	2
PSO PARTIAL	52
PSO SITE	59
PSOD DUE BUILD QUESTIONNAIRE	50.073
PSOD DUE EDIT	50.0731
Print	**File**
PSO ACTION PROFILE	44
PSO ACTION PROFILE #2	44
PSO ALPHA DRUG LIST	50
PSO BBWAIT PRINT	52.11
PSO COST STAT	50.9
PSO DRUG LIST	50
PSO DRUG WARNINGS	52
PSO DRUG WARNINGS HEADER	52
PSO HOLD	52
PSO INACTIVE DRUG LIST	50
PSO INTERVENTIONS	9009032.4
PSO N/F LIST	50
PSO NARC LIST	52
PSO PHARMACY STATS	50.9
PSO REQUEST STATISTICS	50.9
PSO SUSPENSE LIST	52.5
PSO SYNONYM LIST	50
PSOD PRINT ANSWER SHEET	50.0731

(This page included for two-sided copying.)

Software Product Security

Mail Group Setup for the HL7 External Interface

A mail group and device should be set up in order to run the HL7 external interface. The recommended name of the mail group is PSO HLGROUP1. The recommended device name is PSO HLDEVICE1.

Archiving/Purging

For archiving and purging information, see the section titled “Archiving and Purging” in this manual.

Interfacing

For interface information, see the section titled “External Interfaces” in this manual.

Electronic Signatures

Electronic signatures may be established by using the *Electronic Signature code Edit* [XUSESIG] option. In Kernel V. 8.0 the *Electronic Signature code Edit* [XUSESIG] option has been tied to the Common Options, under the *User’s Toolbox* [XUSERTOOLS] submenu, for easy access by all users.

Menu Assignments

The *Outpatient Pharmacy Manager* [PSO MANAGER] menu should be assigned to the Package Coordinator for Outpatient Pharmacy and also added to the menu of the Site Manager and any ADP/IRMS staff that s/he selects to help in the operation of Outpatient Pharmacy. The *Pharmacist Menu* [PSO USER1] option should be assigned to all pharmacists and the *Pharmacy Technician’s Menu* [PSO USER2] option should be assigned to all pharmacy technicians and other pharmacy personnel who may view prescriptions and/or inquire into other Outpatient Pharmacy files.

Security Keys

PSDRPH	This key is assigned to users for accessing the Inbound ePrescribing (eRx) Holding Queue functionality. The key allows users to access all options in the eRx Holding Queue. This key also authorizes pharmacists to verify and dispense controlled substance

	prescription(s). The PSDRPH security key should be given to registered Pharmacists working on controlled substances to honor Drug Enforcement Administration regulations, and should not be given to non-pharmacists except in cases where the package coordinator (ADPAC) is not a registered pharmacist. This security key is used to Validate Patient (VP), Validate Provider (VM), Validate Drug/SIG (VD), Accept Validation (AV), Accept eRx (AC), Reject (RJ), Remove (RM), Hold (H), Un-Hold (UH), Search/Sort, Print, Message View (MV), Acknowledge (ACK) – Refill Response, Refill Request (OP), Acknowledge (ACK) – Rx Cancel, Acknowledge (ACK) – Inbound Refill Error.
PSORPH	This key is required to use all of the Outpatient Pharmacy V. 7.0 options. It should be assigned to all pharmacists, the package coordinator, and all appropriate members of the ADP/IRMS staff.
PSO ERX ADV TECH	This security key is used by advanced pharmacy technicians to Validate Patient/Provider/Drug/SIG, Accept Patient/Provider/Drug Validations, Reject, Hold/Un Hold, Search, Sort, Remove, and Print Message View (MV), Acknowledge (ACK) – Refill Response, Refill Request (OP), Acknowledge (ACK) – Rx Cancel, Acknowledge (ACK) – Inbound Refill Error in the Inbound ePrescribing Holding Queue.
PSO ERX TECH	This security key is used by pharmacy technicians to Validate Patient/Provider/Drug/SIG, Hold/Un Hold, Search, Sort, and Print Message View (MV), Acknowledge (ACK) – Refill Response, Refill Request (OP)in the Inbound ePrescribing Holding Queue.
PSO ERX VIEW	This security key is assigned to users with the need to Search, Sort, Print, Message View (MV) an eRx only in the Inbound ePrescribing Holding Queue.
PSO TECH ADV	This security key is used by pharmacy technicians to HOLD and UNHOLD prescriptions using a subset of the HOLD reasons available to PSORPH key holders.
PSO COPAY	This key should be assigned to any users who need to be notified when a copay exemption cannot be determined at the time a prescription fill is released. Holders of this key are also notified any time the *Exempt Rx Patient Status from Copayment* [PSOCP EXEMPTION] option is used to change the copay exemption for an Rx Patient Status.
PSO REJECTS BACKGROUND MESSAGE	When prescriptions remain on the Third Party Payer Reject - Worklist over the specified number of days, the system will send a Mailman Message to holders of this key.
PSOA PURGE	*NOTE: Disabled until further notice.* This key should be assigned to the package coordinator and/or any person who will be responsible for archiving prescriptions.
PSOLOCKCLOZ	This key is used to override the lockouts in the Clozapine option. All members of the Clozapine treatment team must be entered as users on the system and must be given this key. All pharmacists who have the

	ability to override the lockouts in this option must also hold this key. The Pharmacy Service representative of the Clozapine treatment team should identify these pharmacists.
PSOINTERFACE	This key is used to access the *External Interface Menu* [PSO EXTERNAL INTERFACE] option.
PSO TRICARE/CHAMPVA	This key should be assigned to a pharmacist in order to perform an Override and electronically sign a prescription for a TRICARE or CHAMPVA patient.
PSO TRICARE/CHAMPVA MGR	This key is required to access the *TRICARE CHAMPVA Override Report* [PSO TRI CVA OVERRIDE REPORT] option.
PSO EPHARMACY SITE MANAGER	This key is required to access the *PSO ePharmacy Site Parameters* [PSO ePHARM SITE PARAMETERS] option.
PSO SPMP ADMIN	This key is used by the Outpatient Pharmacy (OP) package to grant certain users administration privileges to perform configuration updates in the State Prescription Monitoring Program (SPMP) module.

File Security

This package requires 26 files in addition to those of the Kernel and other files to which it points, for example the PATIENT file (#2). Information about all files, including these can be obtained by using the VA FileMan to generate a list of file attributes.

File Numbers	File Names	DD	RD	WR	DEL	LAYGO
50.073	DUE QUESTIONNAIRE					
50.0731	DUE ANSWER SHEET					
50.0732	DUE QUESTION					
50.0733	DUE SECTION					
50.9	DRUG COST					
52	PRESCRIPTION					
52.09	REMOTE PRESCRIPTION LOG	#	P	P	P	P
52.11	PATIENT NOTIFICATION (Rx READY)					
52.4	RX VERIFY	@	@	@	@	@
52.41	PENDING OUTPATIENT ORDERS			@		
52.43	PRESCRIPTION REFILL REQUEST	@	Pp	@	@	@
52.45	ERX SERVICE REASON CODES	@	@	@	@	@
52.46	ERX EXTERNAL PATIENT	@	@	@	@	@
52.47	ERX EXTERNAL PHARMACY	@	@	@	@	@
52.48	ERX EXTERNAL PERSON	@	@	@	@	@
52.49	ERX HOLDING QUEUE	@	@	@	@	@
52.5	RX SUSPENSE				#	
52.51	PHARMACY EXTERNAL INTERFACE	@	@	@	@	@
52.52	CLOZAPINE PRESCRIPTION OVERRIDES	@	@	@	@	@

File Numbers	File Names	DD	RD	WR	DEL	LAYGO
52.53	PHARMACY AUTOMATED DISPENSING DEVICES					
52.8	PHARMACY ARCHIVE					
52.86	EPHARMACY SITE PARAMETERS	@	Pp	@	@	@
52.87	PSO AUDIT LOG	@	Pp	@	@	@
52.9	PHARMACY PRINTED QUEUE					
52.91	TPB ELIGIBILITY	@				
52.92	TPB INSTITUTION LETTERS	@				
53	RX PATIENT STATUS					
58.4	SPMP ASAP RECORD DEFINITION					
58.41	SPMP STATE PARAMETERS	@	@	@	@	@
58.42	SPMP EXPORT BATCH					
59	OUTPATIENT SITE					
59.1	OUTPATIENT AMIS DATA	@		@	@	@
59.12	OUTPATIENT PHARMACY MANAGEMENT DATA	@		@	@	@
59.2	WAITING TIME	@	@	@	@	@
59.3	GROUP DISPLAY	@	@	@	@	@
59.8	OUTPATIENT CLINIC SORT GROUP					

Please refer to Chapter 28 of Kernel V. 8.0 Systems Manual concerning installation of security codes sections entitled “Sending Security Codes.”

Outpatient Pharmacy V. 7.0 Menu Diagrams

Three main menus are exported with the package. The *Outpatient Pharmacy Manager* [PSO MANAGER] menu should be assigned to supervisors, package coordinators, and members of the ADP/IRMS staff. Pharmacists should have the *Pharmacist Menu* [PSO USER1] option and clerks and technicians should have the *Pharmacy Technician's Menu* [PSO USER2] option.

Outpatient Pharmacy Manager

Archiving ...
- Find
- Save to Tape
- Tape Retrieval
- Archive to File
- File Retrieval
- Purge
- **> Out of order: Unavailable - Under Construction
- List One Patient's Archived Rx's
- Print Archived Prescriptions

Autocancel Rx's on Admission

Bingo Board ...
- BM Bingo Board Manager ...
  - Enter/Edit Display
  - Auto-Start Enter/Edit
  - Print Bingo Board Statistics
  - Print Bingo Board Wait Time
  - Purge Bingo Board Data
  - Start Bingo Board Display
  - Stop Bingo Board Display
- BU Bingo Board User ...
  - Enter New Patient
  - Display Patient's Name on Monitor
  - Remove Patient's Name from Monitor
  - Status of Patient's Order

Change Label Printer

Check Drug Interaction

Clozapine Pharmacy Manager
- Display Lab Tests and Results
- Edit Data for a Patient in the Clozapine Program
- List of Override Prescriptions
- Register Clozapine Patient

Copay Menu ...
- CHAMPUS Billing Exemption
- Exempt Rx Patient Status from Copayment
- Reset Copay Status List Manager
- Reset Copay Status/Cancel Charges

DUE Supervisor ...
- 1 Enter a New Answer Sheet
- 2 Edit an Existing Answer Sheet
- 3 Create/Edit a Questionnaire
- 4 Batch Print Questionnaires
- 5 DUE Report

Enter/Edit Clinic Sort Groups

External Interface Menu …
- Purge External Batches
- Reprint External Batches
- View External Batches

Label/Profile Monitor Reprint

Maintenance (Outpatient Pharmacy) ...
- Site Parameter Enter/Edit
- Edit Provider
- Add New Providers
- Queue Background Jobs
- Autocancel Rx's on Admission
- Bingo Board Manager ...
  - Enter/Edit Display
  - Auto-Start Enter/Edit
  - Print Bingo Board Statistics
  - Print Bingo Board Wait Time
  - Purge Bingo Board Data
  - Start Bingo Board Display
  - Stop Bingo Board Display
- Edit Data for a Patient in the Clozapine Program
- Enter/Edit Clinic Sort Groups
- Initialize Rx Cost Statistics
- Edit Pharmacy Intervention
- Delete Intervention
- Auto-delete from Suspense
- Automate Internet Refill
- Delete a Prescription
- Enter/Edit Automated Dispensing Devices
- Expire Prescriptions
- Manual Auto Expire Rxs
- Non-VA Provider Import
- Prescription Cost Update
- Purge Drug Cost Data
- Purge External Batches
- Recompile AMIS Data

Medication Profile

Output Reports ...

- Action Profile (132 COLUMN PRINTOUT)
- Alpha Drug List and Synonyms
- AMIS Report
- Bad Address Reporting Main Menu …
  - Bad Address Suspended List
  - List Prescriptions Not Mailed
- CMOP Controlled Substance Rxs Dispense Report
- Commonly Dispensed Drugs
- Cost Analysis Reports ...
  - Clinic Costs
  - Division Costs by Drug
  - Drug Costs
  - Drug Costs by Division
  - Drug Costs by Division by Provider
  - Drug Costs by Provider
  - High Cost Rx Report
  - Patient Status Costs
  - Pharmacy Cost Statistics Menu ...
    - Pharmacy Statistics
    - Sort Statistics By Division
  - Provider by Drug Costs
  - Provider Costs
  - Request Statistics
- Daily AMIS Report
- Drug List By Synonym
- Free Text Dosage Report
- Inactive Drug List
- Internet Refill Report
- List of Patients/Prescriptions for Recall Notice
- List Prescriptions on Hold
- Management Reports Menu ...
  - Daily Management Report Menu ...
    - All Reports
    - Cost of Prescriptions
    - Count of Prescriptions
    - Intravenous Admixture
    - Type of Prescriptions Filled
  - Date Range Recompile Data
  - Initialize Daily Compile
  - Monthly Management Report Menu ...
    - All Reports
    - Cost of Prescriptions
    - Count of Prescriptions
    - Intravenous Admixture
    - Type of Prescriptions Filled
  - One Day Recompile Data
  - Purge Data

Medication Profile
Monthly Drug Cost
Narcotic Prescription List
Non-Formulary List
Non-VA Meds Usage Report
Poly Pharmacy Report
Prescription List for Drug Warnings
Released and Unreleased Prescription Report

Pharmacy Intervention Menu ...
Enter Pharmacy Intervention
Edit Pharmacy Intervention
Print Pharmacy Intervention
Delete Intervention
View Intervention

Process Order Checks

Release Medication

Return Medication to Stock

Rx (Prescriptions) ...
Patient Prescription Processing
Barcode Rx Menu ...
Barcode Batch Prescription Entry
Check Quality of Barcode
Process Internet Refills
Complete Orders from eRX
Complete Orders from OERR
Discontinue Prescription(s)
Edit Prescriptions
ePharmacy Menu ...
Ignored Rejects Report
ePharmacy Medication Profile (View Only)
NDC Validation
ePharmacy Medication Profile Division Preferences
ePharmacy Site Parameters
Third Party Payer Rejects - View/Process
Third Party Payer Rejects – Worklist
TRICARE CHAMPVA Override Report
Pharmacy Productivity/Revenue Report
View ePharmacy Rx
List One Patient’s Archived Rx’s
Manual Print of Multi-Rx Forms
OneVA Pharmacy Prescription Report
Reprint an Outpatient Rx Label
Signature Log Reprint
View Prescriptions

ScripTalk Main Menu ...

PT ScripTalk Patient Enter/Edit
QBAR Queue ScripTalk Label by Barcode
QRX Queue ScripTalk Label by Rx#
RPT ScripTalk Reports ...
AUD ScripTalk Audit History Report
WHO Report of ScripTalk Enrollees
Reprint a non-voided Outpatient Rx Label
PARM Set Up and Test ScripTalk Device ...
ScripTalk Device Definition Enter/Edit
Print Sample ScripTalk Label
Test ScripTalk Device
Reinitialize ScripTalk Printer

Supervisor Functions ...

Add New Providers
Daily Rx Cost
Delete a Prescription
Edit Provider
Initialize Rx Cost Statistics
Inter-Divisional Processing
Inventory
Lookup Clerk by Code
Medication Status Check
Monthly Rx Cost Compilation
Patient Address Changes Report
Pharmacist Enter/Edit
Purge Drug Cost Data
Recompile AMIS Data
Site Parameter Enter/Edit
State Prescription Monitoring Program Menu
View/Edit ASAP Definitions
View/Edit SPMP State Parameters
View/Export Single Prescription
View/Export Batch
Export Batch Processing
Accounting Of Disclosures Report
Manage Secure SHell (SSH) Keys
Unmark Rx Fill as Administered In Clinic
View Provider

Suspense Functions ...

Auto-delete from Suspense
Change Suspense Date
Count of Suspended Rx’s by Day
Delete Printed Rx’s from Suspense
Log of Suspended Rx’s by Day (this Division)
Print from Suspense File
Pull Early from Suspense
Queue CMOP Prescription

Reprint Batches from Suspense
Update Patient Record
Verification ...
List Non-Verified Scripts
Non-Verified Counts
Rx Verification by Clerk

Pharmacist Menu

Bingo Board User ...
Enter New Patient
Display Patient's Name on Monitor
Remove Patient's Name from Monitor
Status of Patient's Order
Change Label Printer
Change Suspense Date
Check Drug Interaction
DUE Supervisor ...
1 Enter a New Answer Sheet
2 Edit an Existing Answer Sheet
3 Create/Edit a Questionnaire
4 Batch Print Questionnaires
5 DUE Report
Enter/Edit Clinic Sort Groups
External Interface Menu …
Purge External Batches
Reprint External Batches
View External Batches
Medication Profile
Pharmacy Intervention Menu ...
Enter Pharmacy Intervention
Edit Pharmacy Intervention
Print Pharmacy Intervention
Delete Intervention
View Intervention
Print from Suspense File
Process Order Checks
Pull Early from Suspense
Queue CMOP Prescription
Release Medication
Return Medication to Stock
Rx (Prescriptions) ...
Patient Prescription Processing
Barcode Rx Menu ...
Barcode Batch Prescription Entry
Check Quality of Barcode
Process Internet Refills
Complete Orders from OERR
Discontinue Prescription(s)

Edit Prescriptions
ePharmacy Menu ...
Ignored Rejects Report
ePharmacy Medication Profile (View Only)
NDC Validation
ePharmacy Medication Profile Division Preferences
ePharmacy Site Parameters
Third Party Payer Rejects - View/Process
Third Party Payer Rejects - Worklist
TRICARE CHAMPVA Override Report
Pharmacy Productivity/Revenue Report
View ePharmacy Rx
List One Patient's Archived Rx's
Manual Print of Multi-Rx Forms
OneVA Pharmacy Prescription Report
Reprint an Outpatient Rx Label
Signature Log Reprint
View Prescriptions
Update Patient Record
Verification ...
List Non-Verified Scripts
Non-Verified Counts
Rx Verification by Clerk

Pharmacy Technician's Menu

Bingo Board User ...
Enter New Patient
Display Patient's Name on Monitor
Remove Patient's Name from Monitor
Status of Patient's Order
Change Label Printer
DUE User ...
1 Enter a New Answer Sheet
2 Edit an Existing Answer Sheet
3 Batch Print Questionnaires
Medication Profile
Patient Prescription Processing
Pull Early from Suspense
Queue CMOP Prescription
Release Medication
Update Patient Record

Standalone Options

The Transitional Pharmacy Benefit (TPB) options were available in previous releases of Outpatient Pharmacy V. 7.0, but are currently placed “Out of Order” by PSO*7*227.

Non-VA Provider Inactivate [PSO NON-VA PROVIDER INACTIVATE] option was added by patch PSO*7.0*481. This option is only accessible by users with programmer level access and is not attached to a menu. See the Non-VA Provider Import (PSO*7.0*481) Deployment, Installation, Back-out and Rollback Guide for more information.

(This page included for two-sided copying.)

Journaling Globals

The primary global the Outpatient Pharmacy V. 7.0 package uses is ^PSRX. This global is recommended if journaling is used. The majority of the other files used by the Outpatient Pharmacy package are stored in the ^PS global. This global is also recommended for journaling, if used.

Barcodes and Label Printer Support

This version of Outpatient Pharmacy includes the ability to print barcodes on the patient copy, the pharmacist's copy, and the patient narrative documents for new label stock and laser labels. Two options utilize the barcodes.

Note: The OneVA Pharmacy Patch PSO*7*454 introduced the OneVA Pharmacy label-generation functionality with new/updated label routines. The barcode printed on the OneVA Pharmacy label will contain the host site information where the prescription order originated not the dispensing site where the prescription is being filled.

Check Quality of Barcode [PSO BARCODE CHECK] option is used to monitor the quality and readability of the barcode before it is mailed.

Barcode Batch Prescription Entry [PSO BATCH BARCODE] option is used to actually refill the prescriptions utilizing barcodes in a batch entry.

If barcodes are not used, enter an "OUT OF ORDER MESSAGE" for these two options.

Barcodes on Dot Matrix Printers

Three parameters are used.

- X is the barcode height. Values can be "S", "M" or "L". If X is undefined or not equal to one of these, the default value of "S" is used. "S" is 2/10 inch for the DS-220 and 1/6 inch for the MT-290. "M" is 4/10 inch for the DS-200 and 1/3 inch for the MT-290. "L" is one inch for both.
- X1 is the value of $X at the left edge of the barcode. If X1 is undefined, the default value of 0 is used.
- X2 is the data to be bar coded. Remember the code 39 character set that the VA uses is a limited subset of the ASCII character set containing only the numbers, uppercase letters, and eight punctuation characters. In most cases, any other characters are not printed. For example, the barcode for the string 123abc will be the same as the string 123.

On most printers, printing a barcode is a graphics operation that causes the value of $Y to be something other than the line count from the top of the page. Forms with barcodes must use a form feed to go to the top of the next form rather than a counted number of line feeds. This is why printers used to print barcodes on outpatient pharmacy labels *must be set for a form length of 24 lines or four inches.*

The following section, New Label Stock, contains barcode on and off sequences for various printers.

New Label Stock (Version 6.0 and Later Versions) – Dot Matrix Labels

*****Important*****

Please test new label stock on all printers that will be used before going into production with new label stock.

Printers used to print the new label stock must be set to print at 12 characters per inch. The form length must be set to 5 inches.

Previously, old label stock printed barcodes in one column at 10 characters per inch. New label stock prints barcodes at 12 characters per inch in 2 columns, (columns 54 and 102). The following barcode entries in the TERMINAL TYPE file (#3.2) have worked at either the Birmingham Office of Information Field Office (OIFO) or at a site.

Note: If you cannot find barcodes that work, please contact the nearest OIFO.

Check to see that a line feed is performed after the barcode off sequence is executed. Due to limited space, information must be printed after certain barcodes print, without relying on a line feed in the Outpatient Pharmacy code. To test this, print a test label for an Rx with no refills. On the center copy of the label, on the next line after the "station number-Rx no." which prints directly under the barcode, one of the two following lines should print clearly:

```
* NO REFILLS REMAINING ** PHYSICIAN USE ONLY *
```

or

```
*** This prescription CANNOT be renewed ***
```

If there is a problem, insert a line feed at the end of the Barcode Off sequence.

(Add a ,! to the end of the sequence.)

Remember to set the New Label Stock site parameter to Yes.

Three site parameters provide patient instructions that will print after each patient's prescriptions. They are "NARRATIVE NON-REFILLABLE RX", "NARRATIVE REFILLABLE RX", and "NARRATIVE FOR COPAY DOCUMENT". The "NARRATIVE FOR COPAY DOCUMENT" will only print if at least one of the patient's prescriptions is subject to a Copay charge.

For the Data South 220

BAR CODE ON=

*27,"[1w",*27,"$70s",*94,"H",$S('$D(X):"04",X="M":"04",X="S":"02",X="L":"10",1: "04"),*94, "BDB"

BAR CODE OFF=*94,"G",*27,"$70c",*27,"[2w",!

For the MT-661

BAR CODE ON=
*27,"[<4h",*94,$S($X<60:"T450",1:"T850"),*94,"W9;5;1",*94,"B1;35;1;3",*13

BAR CODE OFF=*13,*10,*27,"[<4l",*27,"[5w"

The character after the [<4 in the BAR CODE OFF above is a lower case L.

For the Genicom 4440:

BAR CODE ON=*27,"[;3;1;;4;;4;;;1;}",*27,"[3t"

BAR CODE OFF=*27,"[0t",!

For the MT290:

BAR CODE ON=*26, "F0",$S('$D(X):2,X="M":2,X="S":1,X="L":6,1:2), ";000",*25,*20,"*"

BAR CODE OFF="*",*20,!,?$S($D(X1):X1,1:0),$S($D(X2):X2,1:"")

or

BAR CODE ON=*26,*34,"F3;000",*25,*20,"*"

BAR CODE OFF="*",*20

For the OTC 560:

BAR CODE ON=*27,"[;",$S('$D(X):3,X="M":6,X="L":12,1:3),"} ",*27,"[3t"

BAR CODE OFF=*27,"[0t"

For the Genicom 4490:

BAR CODE ON=*27,"[3t",*14

BAR CODE OFF=*15,*27,"[0t",*13

**The setup of the MT290 will not allow for a form length of 5 inches. It skips from 4 to 5.5. Following is the terminal type information that will allow the MT290 to print the labels at a form length of 5 inches.

```
NAME: P-MANNESMANN MT290/132 (PHAR)     RIGHT MARGIN: 132
  FORM FEED: #                          PAGE LENGTH: 30
  BACK SPACE: $C(8)
  OPEN EXECUTE: W *27,"[4W",*27,"[0Y",*27,"[30t"
  10 PITCH: $C(27)_"[4w"                12 PITCH: $C(27)_"[5w"
  DESCRIPTION: MANNESMANN TALLY 290/132 COLUMNS
  16 PITCH: $C(27)_"[6w"                DEFAULT PITCH: $C(27)_"[4w"
  BAR CODE OFF: "*",*20,!,?$S($D(X1):X1,1:0),$S($D(X2):X2,1:"")
  BAR CODE ON: *26,"F0",$S('$D(X):2,X="M":2,X="S":1,X="L":6,1:2),";000", *25,*20,"*"
```

The *27,"[30t" was added to the Open Execute.

Laser Label Printers

The Outpatient Pharmacy package, with the release of PSO*7*120, supports the use of laser printers to print prescription labels and all associated documents.

Hardware Setup

The printer must be physically connected to the network and then defined in the DEVICE (#3.5) and TERMINAL TYPE (#3.2) files just as any other laser printer on your network is defined.

In addition, the CONTROL CODES field (#55) of the TERMINAL TYPE file (#3.2) must be defined correctly. To facilitate this, a new routine assists with the setup. At the programmer prompt enter: D

^PSOLLU2. You will be prompted for the device. Enter the device you want to use for printing laser labels. Then, you will be prompted for HP or LexMark. Enter the appropriate selection.

Phase I of Laser Labels introduced the routine PSOLLU2. A pre-release to Phase II introduced the PSOLLU3 routine and Phase II introduced the PSOLLU4 routine. (Instructions for running the PSOLLU3 and PSOLLU4 routines are the same as running the PSOLLU2 routine above.) If you are setting up a laser printer for the first time, run all three routines in order – PSOLLU2, PSOLLU3, and PSOLLU4. If you are already running laser labels, you will only need to run the PSOLLU4 routine to update the control codes.

Note: If you are not using either an HP or a LexMark printer, select one. Then, you may need to modify the control codes to work correctly with your printer.

Note: Since there are many options for the barcode chip your printer supports, you may have to modify the codes that control the barcode. The names of the codes are: BLBC, EBLBC, SBT and EBT. If you were already using this printer to print barcodes, you can use the information in the fields BAR CODE ON (#60) and BAR CODE OFF (#61) from the TERMINAL TYPE file (#3.2) as a guide. If you weren't, the barcode chip should have come with documentation showing the sequences necessary. If the documentation is not available, many printers have the ability to print the font set, with escape sequences, from the control panel of the printer.

Note: The OneVA Pharmacy Patch PSO*7*454 introduced the OneVA Pharmacy label-generation functionality with new/updated label routines. The barcode printed on the OneVA Pharmacy label will contain the host site information where the prescription order originated not the dispensing site where the prescription is being filled.

Example Session:

```
>D ^PSOLLU2
DEVICE: HOME// FIDO  PRINTERS CORNER - LINE 000    Right Margin: 132//
HP or LexMark: L
You will be copying the CONTROL CODES to device: _LTA9053: are you sure? Y Copying...
```

Sample Control Code Entries

The following are sample control code entries from one TERMINAL TYPE. Actual entries may vary depending on make and model of printer or barcode chip.

```
NUMBER: 1                                CTRL CODE ABBREVIATION: LLI
  FULL NAME: LASER LABEL INIT
  CONTROL CODE: W *27,"&r1F",*27,"E",*27,"&l0O",*27,"&u300D",*27,"&l3A",*27,"&l0
E",!
NUMBER: 2                                CTRL CODE ABBREVIATION: F10
  FULL NAME: TEN POINT FONT - NO BOLD
  CONTROL CODE: W *27,"(10U",*27,"(s1p10v0s0b16602X"
```

```
NUMBER: 3                               CTRL CODE ABBREVIATION: F8
  FULL NAME: EIGHT POINT FONT - NO BOLD
  CONTROL CODE: W *27,"(10U",*27,"(s1p8v0s0b16602X"
NUMBER: 4                               CTRL CODE ABBREVIATION: F12
  FULL NAME: TWELVE POINT FONT - NO BOLD
  CONTROL CODE: W *27,"(10U",*27,"(s1p12v0s0b16602X"
NUMBER: 5                               CTRL CODE ABBREVIATION: F9
  FULL NAME: NINE POINT FONT - NO BOLD
  CONTROL CODE: W *27,"(10U",*27,"(s1p9v0s0b16602X"
NUMBER: 6                               CTRL CODE ABBREVIATION: ST
  FULL NAME: START OF TEXT
  CONTROL CODE: S PSOY=PSOY+PSOYI W *27,"*p",PSOX,"x",PSOY,"Y"
NUMBER: 7                               CTRL CODE ABBREVIATION: CDII
  FULL NAME: CRITICAL DRUG INTERACTION INITIALIZATION
  CONTROL CODE: S PSOX=0,PSOY=1400,PSOYI=50,PSOFONT="F10"
NUMBER: 8                               CTRL CODE ABBREVIATION: PMII
  FULL NAME: PMI SECTION INITIALIZATION
  CONTROL CODE: S PSOX=0,PSOY=1350,PSOYI=50,PSOFONT="F10",PSOYM=3899
NUMBER: 12                              CTRL CODE ABBREVIATION: ACI
  FULL NAME: ADDRESS CHANGE INITIALIZATION
  CONTROL CODE: S PSOHFONT="F12",PSOX=1210,PSOY=700,PSOFY=1270
NUMBER: 13                              CTRL CODE ABBREVIATION: ALI
  FULL NAME: ALLERGY SECTION INITIALIZATION
  CONTROL CODE: S PSOFONT="F10",PSOX=0,PSOY=1350,PSOYI=50,PSOYM=2700
NUMBER: 14                              CTRL CODE ABBREVIATION: FWU
  FULL NAME: FONT WITH UNDERLINE        CONTROL CODE: W *27,"&d0D"
NUMBER: 15                              CTRL CODE ABBREVIATION: FDU
  FULL NAME: FONT DISABLE UNDERLINE     CONTROL CODE: W *27,"&d@"
NUMBER: 17                              CTRL CODE ABBREVIATION: SPI
  FULL NAME: SUSPENSE PRINT INITIALIZATION
  CONTROL CODE: S PSOFONT="F10",PSOX=1210,PSOY=1350,PSOYI=50,PSOCX=1775,PSOYM=27
00
NUMBER: 18                              CTRL CODE ABBREVIATION: WLI
  FULL NAME: WARNING LABEL INITIALIZATION
  CONTROL CODE: S PSOX=1050,PSOY=55
NUMBER: 19                              CTRL CODE ABBREVIATION: RNI
  FULL NAME: REFILL NARRATIVE INITIALIZATION
  CONTROL CODE: S PSOY=2860,PSOFONT="F10",PSOX=0,PSOYI=50,PSOYM=3950
NUMBER: 20                              CTRL CODE ABBREVIATION: CNI
  FULL NAME: COPAY NARRATIVE INITIALIZATION
  CONTROL CODE: S PSOY=2860,PSOX=1210,PSOYM=3950,PSOFONT="F10",PSOYI=50
NUMBER: 21                              CTRL CODE ABBREVIATION: PII
  FULL NAME: PATIENT INSTRUCTION INITIALIZATION
  CONTROL CODE: S PSOX=1210,PSOY=760,PSOFONT="F12"
NUMBER: 22                              CTRL CODE ABBREVIATION: RPI
  FULL NAME: REFILL PRINT INITIALIZATION
  CONTROL CODE: S PSOFONT="F10",PSOBYI=65,PSOTYI=50,PSOLX=0,PSORX=1210,PSOY=1350
,PSOYM=3650,PSOXI=90,PSOSYI=135
NUMBER: 23                              CTRL CODE ABBREVIATION: BLH
  FULL NAME: BOTTLE LABEL HEADER INITIALIZATION
  CONTROL CODE: S PSOX=100,PSOY=50,PSOYI=30,PSOFONT="F9"
NUMBER: 24                              CTRL CODE ABBREVIATION: BLB
  FULL NAME: BOTTLE LABEL BODY INITIALIZATION
  CONTROL CODE: S PSOX=0,PSODX=275,PSOY=150,PSOYI=40,PSOYM=379,PSOFONT="F10"
NUMBER: 25                              CTRL CODE ABBREVIATION: BLF
  FULL NAME: BOTTLE LABEL FOOTER INITIALIZATION
  CONTROL CODE: S PSODY=460,PSOX=0,PSOCX=280,PSOQY=550,PSOTY=610,PSOFONT="F10",P
SOQFONT="F8",PSODFONT="F9",PSOTFONT="F10"
NUMBER: 26                              CTRL CODE ABBREVIATION: RT
  FULL NAME: ROTATE TEXT                CONTROL CODE: W *27,"&a90P"
NUMBER: 27                              CTRL CODE ABBREVIATION: NR
  FULL NAME: NORMAL ROTATION            CONTROL CODE: W *27,"&a0P"
NUMBER: 28                              CTRL CODE ABBREVIATION: PFDI
  FULL NAME: PHARMACY FILL DOCUMENT INITIALIZATION
  CONTROL CODE: S PSOFONT="F10",PSOX=0,PSOY=700,PSOYI=40,PSOYM=969
NUMBER: 29                              CTRL CODE ABBREVIATION: PFDQ
  FULL NAME: PHARMACY FILL DOCUMENT QUANTITY
  CONTROL CODE: S PSOX=0,PSOCX=200,PSOY=970,PSOYI=50,PSOQFONT="F8",PSOFONT="F10"
NUMBER: 31                              CTRL CODE ABBREVIATION: AWI
  FULL NAME: ALLERGY WARNING INITIALIZATION
  CONTROL CODE: S PSOX=0,PSOY=1400,PSOYI=50,PSOFONT="F10"
NUMBER: 32                              CTRL CODE ABBREVIATION: F6
  FULL NAME: SIX POINT FONT - NO BOLD
  CONTROL CODE: W *27,"(10U",*27,"(s1p6v0s0b16602X"
```

```
NUMBER: 33                              CTRL CODE ABBREVIATION: EBT
  FULL NAME: END OF BARCODE TEXT
  CONTROL CODE: W *27,"(8U",*27,"(s1p8v0s0b16602T",!
NUMBER: 34                              CTRL CODE ABBREVIATION: BLBC
  FULL NAME: BOTTLE LABEL BARCODE
  CONTROL CODE: W *27,"(s1p10.4v4,12b4,12s24670T",*27,"&a90P",*27,"*p3650x1000Y"
NUMBER: 35                              CTRL CODE ABBREVIATION: PFDT
  FULL NAME: PHARMACY FILL DOCUMENT TRAILER
  CONTROL CODE: S PSOY=1015,PSOYI=45,PSOX=0,PSOFONT="F10",PSOBYI=50,PSOTFONT="F9
",PSOBY=1280
NUMBER: 36                              CTRL CODE ABBREVIATION: EBLBC
  FULL NAME: END OF BOTTLE LABEL BARCODE
  CONTROL CODE: W *27,"(10U",*27,"(s1p10v0s0b16602T",*27,"&a0P",!
NUMBER: 37                              CTRL CODE ABBREVIATION: SBT
  FULL NAME: START OF BARCODE TEXT
  CONTROL CODE: S PSOY=PSOY+PSOYI W *27,"*p",PSOX,"x",PSOY,"Y",*27,"(s1p14.4v6,1
8b6,18s24670T"
NUMBER: 43                              ABBREVIATION: F6B
  FULL NAME: SIX POINT FONT, BOLDED
  CONTROL CODE: W *27,"(10U",*27,"(s1p6v0s3b16602T"
NUMBER: 44                              ABBREVIATION: F8B
  FULL NAME: EIGHT POINT FONT, BOLDED
  CONTROL CODE: W *27,"(10U",*27,"(s1p8v0s3b16602T"
NUMBER: 45                              ABBREVIATION: F9B
  FULL NAME: NINE POINT FONT, BOLDED
  CONTROL CODE: W *27,"(10U",*27,"(s1p9v0s3b16602T"
NUMBER: 46                              ABBREVIATION: F10B
  FULL NAME: TEN POINT FONT, BOLDED
  CONTROL CODE: W *27,"(10U",*27,"(s1p10v0s3b16602T"
NUMBER: 47                              ABBREVIATION: F12B
  FULL NAME: 12 POINT FONT BOLDED
  CONTROL CODE: W *27,"(10U",*27,"(s1p12v0s3b16602T"
NUMBER: 72                              ABBREVIATION: PFI
  FULL NAME: PATIENT FILL INITIALIZATION
  CONTROL CODE: S PSOFONT="F10",PSOX=1210,PSOY=710,PSOYI=45,PSOHFONT="F12",PSOBY
I=100
NUMBER: 73                              ABBREVIATION: PFDW
  FULL NAME: PHARMACY FILL DOCUMENT WARNING
  CONTROL CODE: S PSOY=1258,PSOX=660,PSOYI=30,PSOFONT="F8",PSOYM=1329
NUMBER: 74                              ABBREVIATION: MLI
  FULL NAME: MAILING LABEL INITIALIZATION
  CONTROL CODE: S PSOFONT="F10",PSOX=1680,PSOY=175,PSOYI=50
NUMBER: 75                              ABBREVIATION: RMI
  FULL NAME: RETURN MAIL INITIALIZATION
  CONTROL CODE: S PSOHFONT="F8",PSOFONT="F10",PSOX=1680,PSOY=35,PSORYI=40,PSOHYI
=40,PSOTFONT="F8",PSOTY=550
NUMBER: 12172                           CTRL CODE ABBREVIATION: LL
  FULL NAME: LASER LABEL                CONTROL CODE: Q
```

VMS Print Queue Setup

If you use VMS print queues, an additional setup may be necessary. The form for laser labels must have specific characteristics. If you need help defining the form, please contact the National Help Desk.

Note: The form must have a length of 255 and a width of 512.

The following is an example form:

```
Form name                           Number   Description
---------                           ------   -----------
```

```
LABELFORM                                   2   LASER LABEL
    /LENGTH=255 /MARGIN=(BOTTOM=6) /STOCK=LABELFORM /TRUNCATE /WIDTH=512
```

Control Codes

To modify the control codes to work appropriately with your device, use the following information.

Control Codes in use by Laser Labels:

ACI = ADDRESS CHANGE INITIALIZATION
ALI = ALLERGY SECTION INITIALIZATION
AWI = ALLERGY WARNING INITIALIZATION
BLB = BOTTLE LABEL BODY INITIALIZATION
BLBC = BOTTLE LABEL BARCODE
BLF = BOTTLE LABEL FOOTER INITIALIZATION
BLH = BOTTLE LABEL HEADER INITIALIZATION
CDII = CRITICAL DRUG INTERACTION INITIALIZATION
CNI = COPAY NARRATIVE INITIALIZATION
EBLBC = END OF BOTTLE LABEL BARCODE
EBT = END OF BARCODE TEXT
F10 = TEN POINT FONT - NO BOLD
F10B = TEN POINT FONT, BOLDED
F12 = TWELVE POINT FONT - NO BOLD
F12B = 12 POINT FONT BOLDED
F6 = SIX POINT FONT - NO BOLD
F6B = SIX POINT FONT BOLDED
F8 = EIGHT POINT FONT - NO BOLD
F8B = EIGHT POINT FONT BOLDED
F9 = NINE POINT FONT - NO BOLD
F9B = NINE POINT FONT BOLDED
FDU = FONT DISABLE UNDERLINE
FWU = FONT WITH UNDERLINE
LL = LASER LABEL
LLI = LASER LABEL INIT
MLI = MAILING LABEL INITIALIZATION
NR = NORMAL ROTATION
PFDI = PHARMACY FILL DOCUMENT INITIALIZATION
PFDQ = PHARMACY FILL DOCUMENT QUANTITY
PFDT = PHARMACY FILL DOCUMENT TRAILER
PFDW = PHARMACY FILL DOCUMENT WARNING
PFI = PATIENT FILL INITIALIZATION
PII = PATIENT INSTRUCTION INITIALIZATION
PMII = PMI SECTION INITIALIZATION
RMI = RETURN MAIL INITIALIZATION
RNI = REFILL NARRATIVE INITIALIZATION
RPI = REFILL PRINT INITIALIZATION
RT = ROTATE TEXT
SBT = START OF BARCODE TEXT
SPI = SUSPENSE PRINT INITIALIZATION
ST = START OF TEXT
WLI = WARNING LABEL INITIALIZATION

In addition to escape sequences to control printer output, variables are defined in the control codes that allow the routine to correctly position text and use the appropriate font.

The following is the description of the variables and their usage:

PSOX – X coordinate
PSOY – Y coordinate
PSOYI – Y increment, used to determine spacing between lines
PSOFONT – font size to be used. The font used is Arial.
PSOYM – bottom margin for this section

Some sections contain variables specific only to that section. They are as follows:

Control Code	Variable
MLI	PSOHFONT – font for header lines
ACI	PSOHFONT – font for header lines
RMI	PSORYI – Y coordinate for return mail name
	PSOHYI – Y coordinate for header line
	PSOTFONT – font for trailer line
	PSOTY – Y coordinate for trailer line
SPI	PSOCX – X coordinate for date
RPI	PSOBYI – Y increment for barcode
	PSOTYI – Y increment for trailer information
	PSOLX – X coordinate for left side of page
	PSORX – X coordinate for right side of page
	PSOSYI – Y increment for signature line
	PSOXI – X increment
BLB	PSOBX – X coordinate for barcode
BLF	PSODY – Y coordinate for discard line
	PSOCX – X coordinate for continued line
	PSOQY – Y coordinate for quantity information
	PSOTY – Y coordinate for trailer information
	PSOQFONT – font for quantity
	PSODFONT – font for discard line
	PSOTFONT – font for trailer information
PFDQ	PSOCX – X coordinate for continued line
	PSOQFONT – font for quantity
PFDT	PSOBYI – Y increment for barcode
	PSOTFONT – font for trailer information
	PSOBY – Y coordinate for barcode
PFI	PSOHFONT – font for header
	PSOBYI – Y increment for barcode

ScripTalk® Printers

ScripTalk® is a registered trademark of En-Vision America.

The Outpatient Pharmacy V. 7.0 package, with the release of PSO*7*135, supports the use of ScripTalk® printers that print to microchip-embedded label stock. The label will have printed text on it, along with the microchip containing the contents of the label. Pharmacy or other designated staff will enroll patients

to receive these labels and issue those patients a special reader. When the patient holds a ScripTalk® label near the reader and presses a button, the content of the label is read aloud.

The ScripTalk label, released in 2003, has a 2K memory capacity, which limits the amount of prescription data that can be audibly read to the blind or low-vision Veteran using the system. New ScripTalk labels with 10K capacity are now available. Patch PSO*7*502 takes advantage of that capacity by sending more prescription data, including Drug Warnings, to the ScripTalk label.

The data sent to the ScripTalk label (either 2K or 10K), will now be controlled by one of two new parameters, depending on how your ScripTalk device definitions are set up. If they are set up at the system level using a mapped device, the dataset will be controlled by the new SCPIPTALK PRINTER TYPE SubField (#.03) in the SCRIPTALK PRINT DEVICE MAPPING SubFile (#59.747) of the PHARMACY SYSTEM File (#59.7), which patch PSS*1.0*217 introduces. If your ScripTalk device definition is set at the Outpatient Site level, the dataset will be controlled by the new SCRIPTRALK PRINTER TYPE Field (#107.2) in the OUTPATIENT SITE File (#59), which this patch introduces. Neither of these new fields will be populated upon patch install of PSO*7*502, and the software assumes a 2k dataset when either parameter is null.

The new ScripTalk 10K printers and labels are backward compatible with the 2K dataset. When a site upgrades to the new 10K equipment, once the hardware is set up and ready for implementation of the new 10K dataset, simply set the applicable parameter to 10K.

In addition, sites will now be able to control whether or not the non-ScripTalk label prints as voided or not voided. This will be in the OUTPATIENT SITE File (#59) and will be by division (outpatient site).

The TCP/IP-enabled printer must be physically connected to the network and then defined in the DEVICE (#3.5) and TERMINAL TYPE (#3.2) files. To connect the printer to the network, a micro print server is necessary for communication to VistA. En-Vision America can assist in identifying the micro print server necessary for the site.

Note: when using 10k printers make sure that the device is set up to use a Print Queue. If it is not then the 10k labels will not print.

The following are examples of the file set-ups. These examples are provided to guide the user in this set up. Please note that these are only examples and there will be some differences in the settings.

Example: DEVICE File (#3.5) Set Up for VMS Sites

```
  NAME: WP706                           $I: USER$:[DSM_SPOOL]WP706.TXT
  LOCATION OF TERMINAL: ScripTalk       ASK HOST FILE: NO
  ASK HFS I/O OPERATION: NO             BARCODE AVAIL: YES
  OPEN PARAMETERS: (NEWVERSION,PROTECTION=(S:RWED,O:RWED,W:RWED))
  SUBTYPE: P-ZEBRA-PHARM
```

Example: DEVICE File (#3.5) Set Up for Cache Sites

```
NAME: WP706                             $I: PQ$:WP706$PRT.TXT
  ASK DEVICE: YES                       ASK PARAMETERS: NO
  TASKMAN PRINT A HEADER PAGE: NO       SIGN-ON/SYSTEM DEVICE: NO
  QUEUING: FORCED                       LOCATION OF TERMINAL:
1B-111/ScripTalk
  ASK HOST FILE: NO                     ASK HFS I/O OPERATION: NO
  SUPPRESS FORM FEED AT CLOSE: YES      BARCODE AVAIL: YES
  OPEN PARAMETERS: "NWS"                SUBTYPE: P-ZEBRA-PHARM
  TYPE: HOST FILE SERVER
  PRINT SERVER NAME OR ADDRESS: wp706.west-palm.med.va.gov
  REMOTE PRINTER NAME: wp706
```

Example: TERMINAL TYPE File (#3.2) Set Up for VMS Sites

```
NAME: P-ZEBRA-PHARM                     SELECTABLE AT SIGN-ON: NO
  RIGHT MARGIN: 132                     FORM FEED: #
  PAGE LENGTH: 64                       BACK SPACE: $C(8)
  CLOSE EXECUTE: U IO K IO(1,IO) S IO=$ZIO C IO S
QUE="/QUEUE="_$E(ION,1,6)_"/DELETE",QUE=$ZC(%PRINT,IO,QUE)
NUMBER: 1                               CTRL CODE ABBREVIATION: FI
  FULL NAME: FORMAT INITIALIZATION      CONTROL CODE: W "^XA",!,"^LH30,60^FS",!
NUMBER: 2                               CTRL CODE ABBREVIATION: SB
  FULL NAME: START OF BARCODE
  CONTROL CODE: W "^BY2,3.0^FO70,25^B3N,N,80,Y,N"
NUMBER: 3                               CTRL CODE ABBREVIATION: ST
  FULL NAME: START OF TEXT
  CONTROL CODE: W "^FO",PSJBARX,",",PSJBARY,"^A0N,30,20" S PSJBARY=PSJBARY+40
NUMBER: 6                               CTRL CODE ABBREVIATION: EB
  FULL NAME: END OF BARCODE             CONTROL CODE: S LINE=LINE+1,PSJBARY=130
NUMBER: 7                               CTRL CODE ABBREVIATION: STF
  FULL NAME: START OF TEXT FIELD        CONTROL CODE: W "^FD"
NUMBER: 8                               CTRL CODE ABBREVIATION: SBF
  FULL NAME: START OF BARCODE FIELD     CONTROL CODE: W "^FD"
NUMBER: 9                               CTRL CODE ABBREVIATION: ETF
  FULL NAME: END OF TEXT FIELD          CONTROL CODE: W "^FS",!
NUMBER: 10                              CTRL CODE ABBREVIATION: SL
  FULL NAME: START OF LABEL
  CONTROL CODE: W "^XA",! S PSJBARY=50,PSJBARX=60
NUMBER: 11                              CTRL CODE ABBREVIATION: EL
  FULL NAME: END OF LABEL               CONTROL CODE: W "^XZ",!
NUMBER: 12                              CTRL CODE ABBREVIATION: EBF
  FULL NAME: END OF BARCODE FIELD       CONTROL CODE: W "^FS",!
```

Example: TERMINAL TYPE File (#3.2) Set Up for Cache Sites

```
NAME: P-ZEBRA-PHARM                     SELECTABLE AT SIGN-ON: NO
  RIGHT MARGIN: 140                     FORM FEED: #
  PAGE LENGTH: 64                       BACK SPACE: $C(8)
  CLOSE EXECUTE: D CLOSE^NVSPRTU
NUMBER: 1                               CTRL CODE ABBREVIATION: FI
  FULL NAME: FORMAT INITIALIZATION      CONTROL CODE: W
"^XA",!,"^LH30,60^FS",!
NUMBER: 2                               CTRL CODE ABBREVIATION: SB
  FULL NAME: START OF BARCODE
  CONTROL CODE: W "^BY2,3.0^FO70,25^B3N,N,80,Y,N"
NUMBER: 3                               CTRL CODE ABBREVIATION: ST
  FULL NAME: START OF TEXT
  CONTROL CODE: W "^FO",PSJBARX,",",PSJBARY,"^A0N,30,20" S
PSJBARY=PSJBARY+40
NUMBER: 6                               CTRL CODE ABBREVIATION: EB
  FULL NAME: END OF BARCODE             CONTROL CODE: S
LINE=LINE+1,PSJBARY=130
NUMBER: 7                               CTRL CODE ABBREVIATION: STF
  FULL NAME: START OF TEXT FIELD        CONTROL CODE: W "^FD"
```

Example: TERMINAL TYPE File (#3.2) Set Up for Cache Sites (continued)

```
NUMBER: 8                               CTRL CODE ABBREVIATION: SBF
   FULL NAME: START OF BARCODE FIELD     CONTROL CODE: W "^FD"
NUMBER: 9                               CTRL CODE ABBREVIATION: ETF
  FULL NAME: END OF TEXT FIELD          CONTROL CODE: W "^FS",!
NUMBER: 10                              CTRL CODE ABBREVIATION: SL
  FULL NAME: START OF LABEL
  CONTROL CODE: W "^XA",! S PSJBARY=50,PSJBARX=60
NUMBER: 11                              CTRL CODE ABBREVIATION: EL
  FULL NAME: END OF LABEL               CONTROL CODE: W "^XZ",!
NUMBER: 12                              CTRL CODE ABBREVIATION: EBF
  FULL NAME: END OF BARCODE FIELD       CONTROL CODE: W "^FS",!
```

Example: ScripTalk Device Definition Enter/Edit

```
CHOOSE 1-5: 4  PSO SCRIPTALK MAIN MENU     ScripTalk Main Menu
```

```
   PT     ScripTalk Patient Enter/Edit
   QBAR   Queue ScripTalk Label by Barcode
   QRX    Queue ScripTalk Label by Rx#
   RPT    ScripTalk Reports ...
          Reprint a non-voided Outpatient Rx Label
   PARM   Set Up and Test ScripTalk Device ...
          Void Label Setup


Select ScripTalk Main Menu <TEST ACCOUNT> Option: PARM  Set Up and Test ScripTal
k Device


          ScripTalk Device Definition Enter/Edit
          Print Sample ScripTalk Label
          Test ScripTalk Device
          Reinitialize ScripTalk Printer



Select Set Up and Test ScripTalk Device <TEST ACCOUNT> Option: SCRIPTalk Device
Definition Enter/Edit



Define ScripTalk Printer by (D)ivision or (P)rinter mapping?:  (D/P): Division

Division:    <enter your division>
SCRIPTALK DEVICE: SCRIPTALK 10K// <enter your ScripTalk device>
SCRIPTALK AUTO-PRINT SETTINGS: AUTO PRINT// ?
     Enter 'A' if ScripTalk label printing should be automatic, "M" if label
     will be queued manually.
     Choose from:
       A        AUTO PRINT
       M        MANUAL PRINT
SCRIPTALK AUTO-PRINT SETTINGS: AUTO PRINT//
SCRIPTALK PRINTER TYPE: 10K LABEL// ?
     Enter 2 if this ScripTalk printer is a 2K printer, enter 10 if this
     ScripTalk printer is a 10K printer.
     Choose from:
       2        2K LABEL
       10       10K LABEL
SCRIPTALK PRINTER TYPE: 10K LABEL//



Define ScripTalk Printer by (D)ivision or (P)rinter mapping?:  (D/P): Printer
Select LABEL PRINTER TO BE MAPPED: <enter label printer>
  SCRIPTALK DEVICE: SCRIPTALK 10K    <ScripTalk device>
  SCRIPTALK PRINTER TYPE: ?
     Enter 2 if this ScripTalk printer is a 2K printer, enter 10 if this
     ScripTalk printer is a 10K printer.
     Choose from:
       2        2K LABEL
       10       10K LABEL
  SCRIPTALK PRINTER TYPE:
```

Glossary

ADP	Automated Data Processing
Archive	Prescriptions, typically those that have been expired or canceled for more than a year, can be saved to tape, and then purged from online storage.
ASAP	American Society for Automation in Pharmacy
BSA	Body Surface Area. The Dubois formula is used to calculate the Body Surface Area using the following formula: $BSA\ (m^2) = 0.20247 \times Height\ (m)^{0.725} \times Weight\ (kg)^{0.425}$ The equation is performed using the most recent patient height and weight values that are entered into the vitals package. The calculation is not intended to be a replacement for independent clinical judgment.
CPRS	Computerized Patient Record System. CPRS is a Graphical User Interface (GUI) in VistA that provides order entry and results reporting for multiple packages.
CrCL	Creatinine Clearance. The CrCL value that displays in the pharmacy header is identical to the CrCL value calculated in CPRS. The formula approved by the CPRS Clinical Workgroup is the following: Modified Cockcroft-Gault equation using Adjusted Body Weight in kg (if ht > 60in) This calculation is not intended to be a replacement for independent clinical judgment.
DHCP	See VistA.
eMI	Enterprise Messaging Services
eRx	ePrescription
ESB	Enterprise Service Bus
HDR/CDS	Health Data Repository/Clinical Data Services
IRMS	Information Resources Management Service
Non-VA Meds	Term that encompasses any Over-the-Counter (OTC) medications, Herbal supplements, Veterans Health Administration (VHA) prescribed medications but purchased by the patient at an outside pharmacy, and medications

	prescribed by providers outside VHA. All Non-VA Meds must be documented in patients' medical records.
OneVA Pharmacy Label	Labels printed for traveling Veterans against prescriptions that originated from another VistA instance other than the site dispensing the prescription.
OPAI	Outpatient Pharmacy Automated Interface
PDMP	Prescription Drug Monitoring Programs
POE	Pharmacy Ordering Enhancements project. POE is a series of enhancements to improve the ordering processes between Inpatient Medications and Outpatient Pharmacy. For Outpatient Pharmacy, POE changes occur in patch PSO*7*46.
Prescription	This term is now referred to throughout the software as medication orders.
Purge	Prescriptions, typically those that have been expired or canceled for more than a year, are saved to tape. Purging removes them from online storage.
Reprinted Label	Unlike a partial prescription, a reprint does not count as workload.
SPMP	State Prescription Monitoring Program
VDEF	VistA Data Extraction Framework
VHA	Veterans Health Administration
VHIC	Veterans Health Identification Card
VistA	Acronym for **V**eterans Health **I**nformation **S**ystems and **T**echnology **A**rchitecture, the new name for Decentralized Hospital Computer Program (DHCP).
VUID	VHA Unique Identifier. A unique integer assigned to reference terms VHA wide.

Appendix A:
Outpatient Pharmacy HL7 Interface Specifications

A. General Information

Introduction

This document specifies an interface between the VistA Outpatient Pharmacy V. 7.0 application and any automatic dispensing system. It is based upon the Health Level 7 Standard (HL7) V. 2.4.

The term “Level 7” refers to the highest level of the Open System Interconnection (OSI) model of the International Standards Organization (ISO). The OSI model is divided into seven levels or layers. The HL7 Standard is primarily focused on what happens within the seventh or application layer. At this layer, the definitions of the data to be exchanged, the timing of the exchanges, and the communication of certain application specific errors occurs. The lower levels support the actual movement of data between systems.

The high-level communication requirements for this interface include TCP/IP, HL7 Logical link and bi-directional communications for the BusinessWare server at the VAMC. BusinessWare will support MLLP connection.

Message Rules

The HL7 Standard describes the basic rules for the exchange of information between two computer systems. The unit of data transferred is referred to as the message. It is comprised of a group of segments in a defined sequence. Each message has a three-character code called a message type that defines its purpose. The real-world event that initiates an exchange of messages is called a trigger event. There is a one-to-many relationship between message types and trigger event codes. A message type may be associated with more than one trigger event, but the same trigger event code may not be associated with more than one message type. All message type and trigger event codes beginning with Z are reserved for locally defined messages. No such codes will be defined within the HL7 Standard.

Some special characters are used to construct messages. They are the segment terminator, field separator, component separator, sub-component separator, repetition separator, and escape character. The segment terminator is always a carriage return (CR in ASCII or hex OD). The other characters recommended by HL7 are used in this application (See HL7 Standard V. 2.4, Chapter 2 for details).

Segment Rules

A segment is a logical grouping of data fields. Segments of a message may be required or optional. They may occur only once in a message or they may be allowed to repeat. Each segment is given a name and is identified by a unique three-character code. All segments beginning with Z are reserved for locally defined messages. No such code will be defined within the HL7 Standard.

Field Rules

A field is a string of characters. HL7 does not care how systems actually store data within an application. Except where noted, HL7 data fields may take on the null value. Sending the null value, which is transmitted as two double quote marks (""), is different from omitting an optional data field. The difference appears when the contents of a message will be used to update a record in a database rather than create a new one. If no value is sent (i.e., it is omitted) the old value should remain unchanged. If the null value is sent, the old value should be changed to null. In defining a segment, the following information is specified about each field:

a) position - position of the data field within the segment.

b) name - unique descriptive name for the field.

c) ID number - integer that uniquely identifies the data field throughout the Standard.

d) maximum length - maximum number of characters that one occurrence of the data field may occupy.

e) optionality - whether the data field is required (R), optional (O), or conditional (C) in a segment.

f) repetition - whether the field may repeat (N=no; Y=yes; (integer)= no. of repeats).

g) table - a table of values for a field (See HL7 Standard V. 2.4, Section 2.7.6 for source of tables).

h) data type - restrictions on the contents of the data field (See HL7 Standard V. 2.4, Section 2.9).

Special Escaping Characters

Standard HL7 field delimiters represented by the "~ , &, | " (tilde, ampersand, pipe) characters, as well as the commonly used VistA "^" (caret), are sometimes needed by users of Outpatient Pharmacy in various fields to provide complete information about a patient or order. The use of these characters can cause sending and receiving software to format HL7 messages incorrectly, and/or construct/deconstruct the information incorrectly. Data loss can also occur if data is truncated at one of the special delimiter characters.

The following fields require special escaping characters.

- Dosage Ordered field – RXE segment / piece 1 / subpiece 1
- Schedule field – RXE segment / piece 1 /subpiece 2
- VA Product Name field – RXE segment / piece 2 / subpiece 2
- Generic drug name field – RXE segment / piece 2 / subpiece 6
- Units name field – RXE segment / piece 5 / subpiece 5
- Dose Form name field – RXE segment / piece 6 / subpiece 5
- Provider Comments field – NTE 6 segment / piece 3
- Expanded Patient Sig field – NTE 7 segment / piece 3

- Front Door Sig field – NTE 21 segment / piece 3
- Back Door Sig field – NTE 21 segment / piece 3

B. Transaction Specifications

Communication Protocol

The lower level communication protocol used by Outpatient Pharmacy V. 7.0 to transmit data between systems is either X3.28 or HLLP over an RS-232 connection.

A site parameter in the Outpatient Pharmacy V. 7.0 application called External Interface controls transmission of data to the dispensing machine. If the parameter is set to **0**, no transmission will occur.

There is also a new parameter that is used for sites running HL7 V.2.4. It is in the OUTPATIENT SITE file (#59), and is called AUTOMATED DISPENSE. This must be set to determine which version of HL7 the site is running.

Processing Rules

A Pharmacy Encoded Order Message is transmitted whenever an order is placed in Outpatient Pharmacy V. 7.0 and the criteria are met for the dispensing machine. Upon successful receipt and storage of the message, the dispensing machine will generate and transmit a Pharmacy Encoded Order Acknowledgement Message.

The following HL7 messages will be used to support the exchange of Outpatient Pharmacy data with any automatic dispensing system:

RDS	Pharmacy Encoded Order/Treatment Dispense Message
RRD	Pharmacy Encoded Order Ack. Message
ACK	General Ack. Message

The messages for the dispense request will consist of the following HL7 segments:

IAM	Patient Adverse Reaction Information
MSH	Message Header
NTE	Notes and Comments
PID	Patient Identification
PV1	Patient Visit
PV2	Patient Visit – additional information
ORC	Common Order
RXE	Pharmacy/Treatment Encoded Order
RXD	Pharmacy/Treatment Dispense

RXR	Pharmacy/Treatment Route

Specific Transaction – Dispense Request

The Pharmacy Encoded Order/Treatment Dispense Message is as follows:

RDS	Pharmacy Encoded Order/Treatment Dispense Message
MSH	Message Header
[PID]	Patient Identification
[PV1]	Patient Visit
[PV2]	Patient Visit – additional information
{IAM}	Patient Adverse Reaction Information
{ORC	Common Order
{NTE}	Notes and Comments
RXE	Pharmacy/Treatment Encoded Order
RXD	Pharmacy/Treatment Dispense
{NTE}	Notes and Comments (contains PMI)
{RXR}	Pharmacy/Treatment Route
}	

Example:

```
MSH|^~\&|PSO VISTA|521^OUTPATIENT|PSO
DISPENSE|521|20030620125043||RDS^O13^RDS_O13|10001|P|2.4|||AL|AL
PID|||5000002199V009321~~~USVHA&&0363~NI~VA FACILITY
ID&500&L~~20140212^234234987~~~USSSA&&0363~SS~VA FACILITY ID&500&L^""""~~~USDOD&&0363~TIN~VA
FACILITY ID&500&L^""""~~~USDOD&&0363~FIN~VA FACILITY ID&500&L^7172676~~~USVHA&&0363~PI~VA
FACILITY ID&500&L|333888478~~~USVHA&&0363~PI~VA FACILITY
ID&742V1&L^492994922~~~USVHA&&0363~PI~VA FACILITY
ID&742V1&L|PSOPATIENT~MULTIPLE~~RX~~~L||19111111|M|||123 MAIN ST~""~ANY TOWN
ONE~CA~94114~USA~P~""~075^~~ ANY TOWN TWO~CA~~~N||(555)555-5555~PRN~PH|||||||||||||||||
PV1||O
PV2|||||||||||||||||||||||||SCL50~NO COPAY
IAM||D^Drug^LGMR120.8|128^ASPIRIN^LGMR120.8|SV|ALLERGY||||||||19961205||||C
ORC|NW|116211~OP7.0|||||||20131204|2438~ OPPROVIDER~TWO
||2438~OPPROVIDER~TWO|NULL||20131204|REPRINT|0~UNKNOWN~99PSC|||VA5|ALBANY ISC~~500|5400
LEGACY DR~~1000~TX~75024|(555)555-5555
NTE|1||ONE TAKE MOUTH TAKE|Medication Instructions
NTE|3||May cause drowsiness. Alcohol may intensify this effect. Use care when operating a car
or dangerous machines.\.sp\May cause dizziness\.sp\It is very important that you take or use
this exactly as directed. Do not skip doses or discontinue unless directed by your
doctor.|Drug Warning Narrative
RXE|""""|R0009~RESERPINE 0.1MG TAB~99PSNDF~57.586.222~RESERPINE
0.1MGS.T.~99PSD|||20~MG~99PSU|1~AEROSOL~99PSF||""""||3|~|3||~~|104822|3|0||||~RESERPINE 0.1MG
S.T.^~RESERPINE 0.1MG TAB||||||||||N^0^N
RXD|3|D0082^DIGOXIN 0.25MG TAB^99PSNDF^372.3^DIGOXIN 0.25MG
TAB^99PSD|20030610||||100001351|3|~6P~6505-00-584-0398|157^OPPROVIDER^TWO||30|CERTIFIED
MAIL||^NON-SAFETY||||20040615
NTE|PMI||CORTICOSTEROIDS - ORAL|Patient Medication Instructions
RXR|6^Oral^99PSR
```

The Pharmacy Encoded Order Acknowledgment Message is as follows:

RRD	**Pharmacy Encoded Order Ack. Message**
MSH	Message Header

MSA Message Acknowledgement

Example:

```
MSH|~^\&|PSO DISPENSE|BP-CHEYENNE|PSO VISTA|BP-CHEYENNE|20040227222454-
0500||ACK|4425981296|T|2.4||
MSA|AA|10001
```

Active Veteran's Health Information Card (VHIC) Numbers Added to PID-4 Segment:

Sites that use the Outpatient Pharmacy Automated Interface (OPAI) interface and COTS products, such as ScriptPro and OptiFill, rely on patient identifying information contained in the PID segment of HL7 messages. The new Veteran's Health Information Card (VHIC) no longer contains the patient's Social Security Number (SSN). Patch PSO*7*434 utilized Patch DG*5.3*874 to include the current *active* VHIC card numbers in the HL7 PID-4 component, providing a interoperability between the barcode on the VHIC card and data in the HL7 PID segment. As of Patch PSO*7*434, the *active* VHIC number(s) were added to the list of identifiers in the PID Segment in sequence PID-4.

Note: The changes in HL7 message generated by OPAI are tested with ScripPro and Optifill, only. Sites using other vendors are requested to inform them of the changes, so that they can make necessary changes to ensure smooth running of interface at their sites.

Example:

```
[VHIC Card #]~~~USVHA&&0363~PI~VA FACILITY ID&742V1&L
```

The following example shows an *active* VHIC number repeated twice in PID-4 for interoperability between DoD and VA because this patient has two *active* VHIC numbers.

Example:

```
PID|||5000002199V009321~~~USVHA&&0363~NI~VA FACILITY
ID&500&L~~20140212^234234987~~~USSSA&&0363~SS~VA FACILITY ID&500&L^""""~~~USDOD&&0363~TIN~VA
FACILITY ID&500&L^""""~~~USDOD&&0363~FIN~VA FACILITY ID&500&L^7172676~~~USVHA&&0363~PI~VA
FACILITY ID&500&L|333888478~~~USVHA&&0363~PI~VA FACILITY
ID&742V1&L^492994922~~~USVHA&&0363~PI~VA FACILITY
ID&742V1&L|PSOPATIENT~MULTIPLE~~RX~~~L||19111111|M|||123 MAIN ST~""~ANY TOWN
ONE~CA~94114~USA~P~""~075^~~ ANY TOWN TWO~CA~~~N||(555)555-5555~PRN~PH||||||||||||||||||
```

Segments used in the Outpatient Pharmacy HL7 interface Dispense Request:

SEGMENT	SEQ#	LEN	DT	R/O	RP/#	TBL#	ELEMENT NAME	EXAMPLE
MSH	1	1	ST	R			Field Separator	|
	2	4	ST	R			Encoding Characters	~^\&
	3	180	HD	R		0361	Sending Application	PSO VISTA

SEGMENT	SEQ#	LEN	DT	R/O	RP/#	TBL#	ELEMENT NAME	EXAMPLE
	4	180	HD	R		0362	Sending Facility – station ID and station DNS name	521~FO-BIRM.MED.VA.GOV~DNS
	5	180	HD	R		0361	Receiving Application	PSO DISPENSE
	6	180	HD	R		0362	Receiving Facility – DNS name and port of dispensing machine	~DISPENSE.VHA.MED.VA.GOV:9300~DNS
	7	26	TS				Date/Time of Message	20040405152416
	9	15	CM	R	0076		Message Type	RDS~013
	10	20	ST	R			Message Control ID	10001
	11	3	PT	R	0103		Processing ID	P
	12	3	VID	R	0104		Version ID	2.4
	15	2	ID			0155	Accept Ack. Type	AL
	16	2	ID			0155	Application Ack Type	AL
PID	3	250	CX	R	Y		Patient ID (will contain IEN, SSN, ICN, Claim #, etc., if exists)	218~~~USVHA&&0363~PI~VA FACILITY ID&500&L
PID	4	250	CX				Active Veteran's Health Identification Card (VHIC) number(s)	
	5	250	XPN	R			Patient Name	OPPATIENT~ONE
	7	26	TS	R			Date/Time of Birth	19280622
	8	1	IS			0001	Administrative Sex	M
	11	250	XAD	R	Y/3		Patient Address	164 Friendship DR~""~TROY~NY~12180~~P~""
	13	250	XTN	R	Y/3		Phone Number-Home	(555)555-5555
PV1	2	1	IS	R		0004	Patient Class	O for Outpatient
PV2	24	15	IS	R	Y		Patient Status Code	SC~NO COPAY
IAM	2	250	CE	O	Y	0127	Allergen Type Code	D~DRUG~LGMR120.8
	3	250	CE	R	Y		Allergen Code/Mnemonic/Description	128~ASPIRIN~LGMR120.8
	4	250	CE	O	Y	0128	Allergy Severity Code	SV
	5	15	ST	O	Y		Allergy Reaction Code	ALLERGY
	13	26	TS	O	Y		Reported Date/Time	19961205
	17	250	CE	O	Y	0438	Allergy Clinical Status Code	C
ORC	1	2	ID	R		0119	Order Control	NW
	2	80	EI	C			Placer Order Number	402331~OP7.0
	9	26	TS	O			Date/Time of Transaction	20040405
	10	250	XCN	R			Entered By	10~OPPROVIDER~TWO
	12	250	XCN	O			Ordering Provider	987~OPPROVIDER~ONE
	13	80	PL	O			Enterer's Location	_TNA1225:
	15	26	TS	O			Order Effective Date	20030616

SEGMENT	SEQ#	LEN	DT	R/O	RP/#	TBL#	ELEMENT NAME	EXAMPLE
	16	10	ST	R			Order Control Code Reason	NEW
	17	250	CE	O			Entering Organization	57~7TH FLOOR~99PSC
	19	250	XCN	O			Action By	65421~OPPROVIDER5~THREE
	20	250	CE	O		0339	Advanced Beneficiary Notice Code	VA5
	21	250	XON	O			Ordering Facility Name	AL BANY~~500
	22	250	XAD	O			Ordering Facility Address	101 CHURCH AVE~~ALBANY ~NY~12208
	23	250	XTN	O			Ordering Facility Phone #r	(518)555-5554
	30	250	CNE	O	1	0483	Enterer Authorization Mode	EL
NTE	1	1	SI	O			Set ID	1
	3	65536	FT	O			Comment	USE 50 FOR TESTING BY MOUTH TWICE A DAY FOR 30 DAYS
	4	250	RE	O			Comment Type – 1 = Medication Instructions 2 = Patient Instructions Narrative 3 = Drug Warning Narrative 4 = Profile Information 5 = Drug Interactions 6 = Drug Allergy Indications 7 = PMI Sheet 8 = Medication Instructions 9 = Privacy Notification	Medication Instructions NOTE: The separator value "\.sp\" has been added to NTE-3, 3 = Drug Warning Narrative, to separate the different warning labels.
RXE	1	200	TQ	R			Quantity/Timing	Null
	2	250	CE	R			Give Code	XH001~HEMATEST TAB (NOT FOR ORAL USE)~99PSNDF~3207.12039.4321~HEMATEST REAGENT TAB. 100/BTL~99PSD
	3	20	NM	R			Give Amount-Minimum	Null
	5	250	CE	R			Give Units	20~MG~99PSU
	6	250	CE	O			Give Dosage Form	165~TAB,TEST~99PSF
	8	200	CM	O			Deliver-To Location	WINDOW
	9	25	ST	O			Substitution Status	(Trade name)
	10	20	NM	O			Dispense Amount	30
	11	250	CE	O			Dispense Units	~TAB
	12	3	NM	O			Number of Refills	3

SEGMENT	SEQ#	LEN	DT	R/O	RP/#	TBL#	ELEMENT NAME	EXAMPLE
	13	250	XCN	O			Ordering Provider's DEA Number	EZ9278277
	14	250	XCN	C			Pharmacist/Treatment Supplier's Verifier ID	188~OPPROVID ER3~ONE
	15	20	ST	R			Prescription Number	100002202
	16	20	NM	O			Number of Refills Remaining	3
	17	20	NM	O			Number of Refills/Doses Dispensed	0
	18	26	TS	O			D/T of Most Recent Refill	200404050830
	21	250	CE	R			Pharmacy/treatment dispense instructions	^IBUPROFEN 400MG TAB
	31	1	ID	R			Supplementary Code = spec hdlg, ScripTalk, PMI language preference	N^0^N
RXD	1	10	NM	R			Dispense Sub-ID Counter	0
	2	250	CE	R			Dispense/Give Code	XH001~HEMAT EST TAB (NOT FOR ORAL USE)~99PSNDF~ 3207.12039.4321 ~HEMATEST REAGENT TAB. 100/BTL~99PSD
	3	26	TS	R			Date/Time Dispensed	20040405
	7	20	ST	R			Prescription Number	100002202
	8	20	NM	O			Number of Refills Remaining	3
	9	25	ST	O			Dispense Notes – DEA spec hdlg, NDC code	S^193-2426-21
	10	200	XCN	O			Dispensing Provider	157~OPPROVID ER~TWO
	12	10	CQ	O			Total Daily Dose	30
	13	200	CM	O			Dispense-To Location	CERTIFIED MAIL
	15	10	CE	O			Pharmacy/Treatment Supplier's Special Dispensing Instructions	~NON-SAFETY
	19	26	TS	O			Substance Expiration Date	20040615
	25	250	CE	O			Supplementary Code	8~NO ALCOHOL
NTE	1	4	SI	O			Set ID-Notes and Comments	7
	3	6000	FT	O	Y		Comment	PMI free text
	4	250	CE	O			Comment Type – P MI	Patient Medication Instructions NOTE: The separator value "\.sp\" has been added to NTE-3, 3 = Drug Warning Narrative, to

SEGMENT	SEQ#	LEN	DT	R/O	RP/#	TBL#	ELEMENT NAME	EXAMPLE
								separate the different warning labels.
RXR	1	250	CE			0162	Route	1~ORAL (BY MOUTH)~99PSR

Notes pertaining to some of the data elements:

[MSH-3] Sending Application is the station ID along with the DNS name of the sending facility.

[MSH-5] Receiving Application is the DNS name and DNS port number of the dispensing application.

[MSH-10] Message Control ID is the number that uniquely identifies the message. It is returned in MSA-2 of the dispense completion message.

[PID-3] Patient ID will contain the following possibilities to identify a patient:

- NI = ICN #
- SS = Social Security #
- PN = Claim #
- PI = DFN #

[PID-4] Alternate Patient ID will contain the active Veteran's Health Identification Card (VHIC) number(s) to identify a patient.

[PID-11] Patient Address
The PID-11 segment contains the following data:

- Patient Permanent Address 1st up-arrow piece
- Patient Place of Birth (City & State) 2nd up-arrow piece
- Confidential Address 3rd up-arrow piece if it is Active
  If Confidential Address is Active, for each Confidential Address Category, an entry will be made into the HL7 record starting in the up-arrow piece 3.
- Patient Temporary Address 3rd up-arrow piece or piece after the last Confidential Address entry if the Confidential Address is active.

PID||||Permanent Address^Place of Birth^Temporary Address||||

[PID-11] Patient Permanent Address
When the permanent address is active, it is the only address in PID-11

Example: `321 Dakota Ave.~"""~WASHINGTON~DC~20032~USA~P~"""~001`

[PID-11] Patient Confidential Address
When the confidential address is active, both the confidential and permanent addresses are located in PID-11.

[PID-11] Patient Temporary Address
When the temporary address is active, both the temporary and permanent addresses are located in PID-11.

Example: 100 PERMANENT ADDRESS~""""~NEW YORK~NY~10018~USA~P~""""~061^~~SAN ANTONIO~TX~~~N^**1 CONFIDENTIAL STREET~""""~NEW YORK~NY~10019~USA~VACAE**~""""~061~~~20160628&20160718^**1 CONFIDENTIAL STREET~""""~NEW YORK~NY~10019~USA~VACAA**" ^HL(772,35537819,"IN",3,0)="~""""~061~~~20160628&20160718^**1 CONFIDENTIAL STREET~""""~NEW YORK~NY~10019~USA~VACAM**~""""~061~~~20160628&20160718^**200 TEMPROARY ADDRESS~""""~NEW YORK~NY~10017~USA~C**

[PID-11] If the BAD ADDRESS INDICATOR (BAI) field (#.121) of the PATIENT file (#2) is set, the text "VAB" concatenated with the BAI code is sent in the Address field of the PID segment of the HL7 message to the filling equipment.

Example: Permanent address – active:
PADD-1~PADD-2~SPRING~TX~77379~~P~PADD-3~201^~~""~""~~~N|""||||||||

Example: Confidential address – active:
PADD-1~PADD-2~SPRING~TX~77379~~P~PADD-3~201^~~""~""~~~N^1 CONFIDENTIAL STREET~""""~NEW YORK~NY~10019~USA~VACAM~

Example: Temporary address – active:
PADD-1~PADD-2~SPRING~TX~77379~~P~PADD-3~201^~~""~""~~~N^TADD-1~TADD-2 TADD-3~PLANO~TX~12345~~C~~""~~~

Example: Address flagged as BAI:
PADD-1~PADD-2~SPRING~TX~77379~~VAB1~PADD-3~201^~~""~""~~~N|""|||||||||

"VAB1" - indicates Bad Address Indicator and 1 is for UNDELIVERABLE (2 for HOMELESS, 3 for OTHER)

Note:
For each Active Confidential Address Category entered for the patient, an entry will be made into the HL7 record delimited by ^.
The code is looping down the Confidential Address Categories and creating an entry for each one.
category=1 (ELIGIBILITY/ENROLLMENT): VACAE
category=2 (APPOINTMENT/SCHEDULING): VACAA
category=3 (COPAYMENTS/VETERAN BILLING): VACAC
category=4 (MEDICAL RECORDS): VACAM
category=5 (ALL OTHERS): VACAO
otherwise= null

The "C" is hardcoded after USA (the country) on the Temporary Address record.
The vendor will need to read through the addresses (^ pieces) until it finds the C in the 7th ~ piece of data for a temporary address.

The following determines whether to send the Temporary Address.
It first checks the TEMPORARY ADDRESS ACTIVE? flag, if set to Yes then checks the TEMPORARY ADDRESS START DATE against the processing date range start date and if

passes then checks the TEMPORARY ADDRESS END DATE against the processing date range end date. If these pass then the Temporary Address is sent in the HL7 record.

There can be up to 5 Confidential address entries (one for each active Confidential Address Category) , 1 Permanent address and 1 Temporary address.

Below is an example of a PID-11 segment with all 7 addresses populated.

^HL(772,35537804,"IN",0)="^^241^241^3160628^"
^HL(772,35537804,"IN",1,0)="PID|||1004459532V886809~~~USVHA&&0363~NI~VA FACILITY
ID&200M&L^101017111~~~USSSA&&0363~SS~VA FACILITY
ID&442&L^"""""~~~USDOD&&0363~TI
N~VA FACILITY ID&442&L^"""""~~~USDOD&&0363~FIN~VA FACILITY
ID&442&L^7187158~~~USV
HA&&0363~PI~VA FACILITY ID&442&L|"
^HL(772,35537804,"IN",2,0)="|last~name~M~~~~L||19710313|F|||100 PERMANENT ADDR
ESS~"""""~NEW YORK~NY~10018~USA~P~"""""~061^~~SAN ANTONIO~TX~~~N^**1 CONFIDENTIAL ST**
REET~""""~NEW YORK~NY~10019~USA~VACAE~"""""~061~~~20160628&20160718^**1 CONFIDENTIA**
L STREET~""""~NEW YORK~NY~10019~USA~VACAA"
^HL(772,35537804,"IN",3,0)="~"""""~061~~~20160628&20160718^**1 CONFIDENTIAL STREET~**
""""~NEW YORK~NY~10019~USA~VACAC~"""""~061~~~20160628&20160718^**1 CONFIDENTIAL STR**
EET~""""~NEW YORK~NY~10019~USA~VACAM~"""""~061~~~20160628&20160718^**1 CONFIDENTIAL**
STREET~""""~NEW YORK~NY~10019~USA~VACAO~"""""
^HL(772,35537804,"IN",4,0)="~061~~~20160628&20160718^**200 TEMPROARY ADDRESS~""""~**
NEW YORK~NY~10017~USA~C~"""""~061~~~20160623&20160802||(222)222-2222~PRN~PH^(111)
111-1111~WPN~PH||||||||||||||||||"

[PV1-2] Patient Class is hard-coded to an O for outpatient.

[PV2-24] Patient Status Code contains the patient status from the prescriptions file followed by a tilde and then whether or not the patient is COPAY.

[IAM-2] Allergen Type Code is the allergy type of F=Food, DF=Drug/Food, D=Drug, DP=Drug/Other, O=Other, DFO=Drug/Food/Other.

[IAM-5] Allergy Reaction Code will contain the possible reactions ALLERGY, PHARMACOLOGIC or UNKNOWN.

[IAM-17] Allergy Clinical Status Code is VERIFIED or NON-VERIFIED.

[ORC-2] Placer Order Number is a composite field. The first component is the IEN from the PRESCRIPTION file (#52). The second component is hard-coded to a value of OP7.0.

[ORC-10] Entered By is the person's pointer to the NEW PERSON file (#200) and name in VistA who keyed in the order.

[ORC-12] Ordering Provider is a composite ID field. The first component is the Provider's pointer to the NEW PERSON file (#200) in VistA and the second component is his/her name.

[ORC.13] Enterer's Location is the printer where the dispensing machine should print the label.

[ORC-15] Order Effective Date is the date/time the order took effect.

[ORC-16] Order Control Code Reason is a coded element field. The fifth component reflects the status of the order (for example, New, Refill, Partial, Reprint, or Partial Reprint).

[ORC-17] Entering Organization is the Clinic number and name.

[ORC-19] Action By is the physician who cosigned, if any, and is a composite field. The first component is the physician's pointer to the NEW PERSON file (#200) in VistA and the second component is his/her name.

[ORC-20] Advanced Beneficiary Notice Code is used to send an indicator to an automated dispensing system that the RX being dispensed is for an electronically billed prescription and that a patient signature is needed. The value of "VA5" will be sent as the indicator in the RDS^O13 Dispense Request message for an ePharmacy patient prescription.

[ORC-21] Ordering Facility Name is the facility name and number found in the OUTPATIENT SITE file (#59).

[ORC-30] Enterer Authorization Mode is passed for digitally signed controlled substance orders. The value of 'EL' is used, representing a value of 'Electronic'.

[NTE] The Set ID field will identify the NTE segment (1=Med. Instructions; 2=Patient Instructions Narrative; 3=Drug Warning Narrative; 4=Profile Information; 5=Drug Interactions; 6=Drug Allergy Indications; 7=PMI Sheet; 8=Medication Instructions; 9=Privacy Notification.) The Comment field will contain the respective information.

Note: The separator value "\.sp\" has been added to NTE-3, 3 = Drug Warning Narrative, to separate the different warning labels.

[RXE-1] Quantity Timing is a required field but it will not be used in Outpatient Pharmacy V. 7.0. It will always be a null value ("").

[RXE-2] Give Code identifies the substance ordered as encoded by the Pharmacy. The components, in order, are the VA Product ID, VA Product Name, National Drug File, local file pointer, local drug name, and the local file.

[RXE-3] Give Amount - Minimum is a required field but it will not be used in Outpatient Pharmacy V. 7.0. It will always be a null value ("").

[RXE-5] Give Units identifies the units for the give amount as encoded by the VA National Drug file.

[RXE-6] Give Dosage Form is a coded element field. The fourth component is the pointer to the DOSAGE FORM file (#50.606). The fifth component is the form name, and the sixth component is the name of coding system (99PSF).

[RXE-8] Deliver-To-Location is the Method of Pickup (Window or Mail).
[RXE-9] Substitution Status is the value of the TRADE NAME field (#6.5) found in the PRESCRIPTION file (#52).

[RXE-10] Dispense Amount identifies the quantity.

[RXE-11] Dispense Units identifies the units for the dispense amount as encoded by the Pharmacy.
[RXE-13] Ordering Provider's DEA Number will contain the physician's DEA number if the drug is a controlled substance.

[RXE-14] Pharmacist/Treatment Supplier's Verifier ID identifies the pharmacist who verified the order. The first component is the DFN pointer in the NEW PERSON file (#200) of VistA and the second component is the name.

[RXE-18] D/T of Most Recent Refill or Dose Dispensed contains the last date/time the patient received this particular drug. This is the PRIOR FILL DATE field (#102.1) from the PRESCRIPTION file (#52).

[RXE-21] Pharmacy/treatment dispense Instructions. (Label name & VA PRINT NAME).

[RXE-31] Supplementary Code contains three pieces of information:

- An indicator that the drug is a controlled substance or not (Y/N).
- An indicator if the patient is a ScripTalk patient (0 or 1).
- An indicator if the patient's PMI language preference is something other than English (Y/N).

[RXD-1] Dispense Sub-ID Counter identifies the prescription fill number.

[RXD-2] Dispense/Give code will contain the same give code as in RXE-2.

[RXD-9] Dispense Notes have two pieces of information:

- DEA, SPECIAL HDLG field (#3) from the DRUG file (#50).
- NDC field (#27) from the PRESCRIPTION file (#52).

[RXD-10] Dispensing Provider is the person who finished the order.

[RXD-12] Total Daily Dose is the days of supply for a partial fill.

[RXD-13] Dispense-To-Location will contain how the patient will receive the medication. Possible answers are WINDOW, REGULAR MAIL, CERTIFIED MAIL or DO NOT MAIL.

[RXD-15] Pharmacy/Treatment Supplier's Special Dispensing Instructions will indicate what sort of bottle cap should be employed. It is a safety cap or non-safety cap.

[RXD-25] Supplementary Code is the drug warning number and text.

[NTE] This segment following the RXD segment will contain the Patient Medication Instructions if any.

Note: The separator value "\.sp\" has been added to NTE-3, 3 = Drug Warning Narrative, to separate the different warning labels.

[RXR-1] Route is the medication route.

Specific Transaction – Dispense Release Date/Time

The messages for the Dispense Release Date/Time will consist of the following HL7 segments:

MSH	Message Header
PID	Patient Identification
PV1	Patient Visit
PV2	Patient Visit – additional information
RXE	Pharmacy/Treatment Encoded Order
RXD	Pharmacy/Treatment Dispense

Example:

```
MSH|^~\&|PSO VISTA|521^OUTPATIENT|PSO
DISPENSE|521|20030620125043||RDS^O13^RDS_O13|10001|P|2.4|||AL|AL
PID|||5000002199V009321~~~USVHA&&0363~NI~VA FACILITY
ID&500&L~~20140212^234234987~~~USSSA&&0363~SS~VA FACILITY ID&500&L^"""~~~USDOD&&0363~TIN~VA
FACILITY ID&500&L^"""~~~USDOD&&0363~FIN~VA FACILITY ID&500&L^7172676~~~USVHA&&0363~PI~VA
FACILITY ID&500&L|333888478~~~USVHA&&0363~PI~VA FACILITY
ID&742V1&L^492994922~~~USVHA&&0363~PI~VA FACILITY
ID&742V1&L|PSOPATIENT~MULTIPLE~~RX~~~L||19111111|M|||123 MAIN ST~""~ANY TOWN
ONE~CA~94114~USA~P~""~075^~~ ANY TOWN TWO~CA~~~N||(555)555-5555~PRN~PH||||||||||||||||
PV1||O
PV2||||||||||||||||||||||||SCL50~NO COPAY
RXE|"""|D0082^DIGOXIN 0.25MG TAB^99PSNDF^372.3^DIGOXIN 0.25MG
TAB^99PSD|"""||20^MG^99PSU|120^TAB, RAPID DISINTEGRATE^99PSF|||LAXOXIN 0.125MG||||||123987
RXD|3|^ASPIRIN 325 MG TAB|20030610||||100001351||20031212~233~6505-00-584-
0398|||||||||20040615
```

Segments used in the Outpatient Pharmacy HL7 interface Dispense Release Date/Time Request:

SEGMENT	SEQ#	LEN	DT	R/O	RP/#	TBL#	ELEMENT NAME	EXAMPLE
MSH	1	1	ST	R			Field Separator	|
	2	4	ST	R			Encoding Characters	~^\&
	3	180	HD	R		0361	Sending Application	PSO VISTA
	4	180	HD	R		0362	Sending Facility – station ID and station DNS name	521~FO-BIRM.MED.VA.GOV~DNS
	5	180	HD	R		0361	Receiving Application	PSO DISPENSE
	6	180	HD	R		0362	Receiving Facility – DNS name and port of dispensing machine	~DISPENSE.VHA.MED.VA.GOV:9300~DNS
	7	26	TS				Date/Time of Message	20040405152416
	9	15	CM	R	0076		Message Type	RDS~013
	10	20	ST	R			Message Control ID	10001
	11	3	PT	R	0103		Processing ID	P
	12	3	VID	R	0104		Version ID	2.4
	15	2	ID			0155	Accept Ack. Type	AL

SEGMENT	SEQ#	LEN	DT	R/O	RP/#	TBL#	ELEMENT NAME	EXAMPLE
	16	2	ID			0155	Application Ack Type	AL
PID	3	250	CX	R	Y		Patient ID (will contain IEN, SSN, ICN, Claim #, etc., if exists)	218~~~USVHA&&0363~PI~VA FACILITY ID&500&L
PID	4	250	CX				Active Veteran's Health Identification Card (VHIC) number(s)	
	5	250	XPN	R			Patient Name	OPPATIENT~ONE
	7	26	TS	R			Date/Time of Birth	19280622
	8	1	IS			0001	Administrative Sex	M
	11	250	XAD	R	Y/3		Patient Address	164 Friendship DR~""~TROY~NY~12180~~P~""
	13	250	XTN	R	Y/3		Phone Number-Home	(555)555-5555
PV1	2	1	IS	R		0004	Patient Class	O for Outpatient
PV2	24	15	IS	R	Y		Patient Status Code	SC~NO COPAY
RXE	1	200	TQ	R			Quantity/Timing	Null
	2	250	CE	R			Give Code	XH001~HEMATEST TAB (NOT FOR ORAL USE)~99PSNDF~3207.12039.4321~HEMATEST REAGENT TAB. 100/BTL~99PSD
	3	20	NM	R			Give Amount-Minimum	Null
	5	250	CE	R			Give Units	20~MG~99PSU
	6	250	CE	O			Give Dosage Form	165~TAB,TEST~99PSF
	8	200	CM	O			Deliver-To Location	WINDOW
	9	25	ST	O			Substitution Status	(Trade name)
	15	20	ST	R			Prescription Number	100002202
RXD	1	10	NM	R			Dispense Sub-ID Counter	3
	2	250	CE	R			Dispense/Give Code	XH001~HEMATEST TAB (NOT FOR ORAL USE)~99PSNDF~3207.12039.4321~HEMATEST REAGENT TAB. 100/BTL~99PSD
	3	26	TS	R			Date/Time Dispensed	20040405
	7	20	ST	R			Prescription Number	100002202
	9	25	ST	O			Dispense Notes – Release Date/Time, Bingo Wait time, NDC Code	200312120830^35^6505-00-584-0398

Notes pertaining to some of the data elements:

[MSH-3] Sending Application is the station ID along with the DNS name of the sending facility.

[MSH-5] Receiving Application is the DNS name and DNS port number of the dispensing application.

[MSH-10] Message Control ID is the number that uniquely identifies the message. It is returned in MSA-2 of the dispense completion message.

[PID-3] Patient ID will contain the following possibilities to identify a patient:

- NI = ICN #
- SS = Social Security #
- PN = Claim #
- PI = DFN #

[PID-4] Alternate Patient ID will contain the active Veteran's Health Identification Card (VHIC) number(s) to identify a patient.

[PV1-2] Patient Class is hard-coded to an O for outpatient.

[PV2-24] Patient Status Code contains the patient status from the prescriptions file followed by a tilde and then whether or not the patient is COPAY.

[RXE-1] Quantity Timing is a required field but it will not be used in Outpatient Pharmacy V. 7.0. It will always be a null value ("").

[RXE-2] Give Code identifies the substance ordered as encoded by the Pharmacy. The components, in order, are the VA Product ID, VA Product Name, National Drug File, local file pointer, local drug name, and the local file.

[RXE-3] Give Amount - Minimum is a required field but it will not be used in Outpatient Pharmacy V. 7.0. It will always be a null value ("").

[RXE-5] Give Units identifies the units for the give amount as encoded by the VA National Drug file.

[RXE-6] Give Dosage Form is a coded element field. The fourth component is the pointer to the DOSAGE FORM file (#50.606). The fifth component is the form name, and the sixth component is the name of coding system (99PSF).

[RXD-1] Dispense Sub-ID Counter identifies which fill the prescription is.

[RXD-2] Dispense/Give code will contain the same give code as in RXE-2.

[RXD-9] Dispense Notes has three pieces of information:

- FILE RELEASE DATE/TIME field (#105.1) from the PRESCRIPTION file (#52).
- BINGO WAIT TIME field (#32) from the PRESCRIPTION file (#52).
- NDC field (#27) from the PRESCRIPTION file (#52).

Specific Transaction – Dispense Completion

The messages for the dispense completion will consist of the following HL7 segments:

MSA	Message Acknowledgment
MSH	Message Header
PID	Patient Identification
ORC	Common Order
RXD	Pharmacy/Treatment Dispense

Example:

```
MSH|^~\&|PSO DISPENSE|521|PSO VISTA|521|20031215125043||RRD^O14^RRD_O14|10001|P|2.4|||AL|AL
MSA|AA~CA|10001
PID|||5000000022V981671^^^USVAMC^PN~1234^^^PN^PI~000456789^^^USSSA^SS||OPPATIENT^ONE||1959011
6|M
ORC|OR|12345||||||||^OPPROVIDER2^THREE|^OPPROVIDER^TWO
RXD|1|D0082^DIGOXIN 0.25MG TAB^99PSNDF^372.3^DIGOXIN 0.25MG
TAB^99PSD|20031215||||123987||06505-5840-
00^20031212^1|1234567^OPPROVIDER1^ONE|||123456789101112131415|||||45201|20041201|BAXTER
```

Segments used in the Outpatient Pharmacy HL7 interface Dispense Completion:

SEGMENT	SEQ#	LEN	DT	R/O	RP/#	TBL#	ELEMENT NAME	EXAMPLE
MSH	1	1	ST	R			Field Separator	|
	2	4	ST	R			Encoding Characters	^~\&
	3	180	HD	R		0361	Sending Application	PSO DISPENSE
	4	180	HD	R		0361	Sending Facility	~DISPENSE.VHA.MED.VA.GOV:9300~DNS
	5	180	HD	R		0361	Receiving Application	PSO VISTA
	6	180	HD	R		0362	Receiving Facility	
	7	26	TS	R			Date/Time of Message	200304050938
	9	15	CM_MSG	R		0076	Message Type	RRD~014
	10	20	ST	R			Message Control ID	10001
	11	3	PT	R		0103	Processing ID	P
	12	60	VID	R		0104	Version ID	2.4
	15	2	ID	O		0155	Accept Acknowledgment	AL
	16	2	ID	O		0155	Application Acknowledgment Type	NE
MSA	1	2	ID	R		0008	Acknowledgment Code	AA
	2	20	ST	R			Message Control ID	10001
PID	3	250	CX	R	Y		Patient ID (will contain IEN, SSN, ICN, Claim #, etc., if exists)	218~~~USVHA&&0363~PI~VA FACILITY ID&500&L
PID	4	250	CX				Active Veteran's Health Identification Card (VHIC) number(s)	
	5	250	XPN	R			Patient Name	OPPATIENT~ONE
	7	26	TS	R			Date/Time of Birth	19280622

SEGMENT	SEQ#	LEN	DT	R/O	RP/#	TBL#	ELEMENT NAME	EXAMPLE
	8	1	IS			0001	Administrative Sex	M
ORC	1	2	ID	R		0119	Order Control	OR
	2	22	EI	C			Placer Order Number	12345
	10	250	XCN	O			Entered By	114~OPPROVIDER2~THREE
	11	250	XCN	O			Verified By	115~OPPROVIDER~TWO
RXD	1	4	NM	R			Dispense Sub-ID Counter	1 (Fill Number)
	2	250	CE	R		0292	Dispense/Give Code	XH001~HEMATEST TAB (NOT FOR ORAL USE)~99PSNDF~3207.12039.4321~HEMATEST REAGENT TAB. 100/BTL~99PSD
	3	26	TS	R			Date/Time Dispensed	20040405
	7	20	ST	R			Prescription Number	100002202
	9	25	ST	O			Dispense Notes NDC Code^Release Date time^Vendor dispense code	06505-5840-00^200312120915^1
	10	200	XCN	O			Dispensing Provider (Verifying/Dispensing Pharmacist)	1234567~OPPROVIDER1~ONE
	13	200	CM	O			Dispense-To Location	123456789101112131415
	18	20	ST	O			Substance Lot Number	45201
	19	26	TS	O			Substance Expiration Date	20050405
	20	250	CE	O		0227	Substance Manufacturer Name	BAXTER

Notes pertaining to some data elements:

[MSH-3] Receiving Application is the DNS name and DNS port number of the dispensing application.

[MSH-5] Sending Application is the station ID along with the DNS name of the facility.

[MSH-10] Message Control ID is the number that uniquely identifies the message.

[MSA-2] Message Control ID is the same number that was in MSH-2 in the dispense request message.

[PID-3] Patient ID will contain the following possibilities to identify a patient:

- NI = ICN #
- SS = Social Security #
- PN = Claim #
- PI = DFN #

[PID-4] Patient ID will contain the active Veteran's Health Identification Card (VHIC) number(s) to identify a patient.

[ORC-2] Placer Order Number is the RX internal entry number.

[ORC-10] Entered By is the name of the Filling Person for the prescription.

[ORC-11] Verified By is the name of the Checking Pharmacist for the prescription.

[RXD-1] Dispense Sub-ID Counter is the fill number for the prescription.

[RXD-3] Date/Time Dispensed is the fill date and time.

[RXD-9] Dispense Notes contains 3 components: 1) The NDC code. 2) The release date time. 3) The Vendor Dispense Code.

[RXD-10] Dispensing Provider is the name of the releasing pharmacist.

[RXD-13] Dispense-To-Location will contain the mail tracking number of the medication sent to the patient.

(This page included for two-sided copying.)

Appendix B:
HL7 Messaging with an External System

New Protocol

A new protocol, PSO RECEIVE ORDER, is exported for processing orders from an external system. To use this functionality, this protocol must be added as a SUBSCRIBER to the Event Driver protocol in the PROTOCOL file (#101), which sends the external order message.

New Application Parameter

A new HL7 application parameter, PSO RECEIVE, is exported as the Receiving Application of the PSO RECEIVE ORDER protocol from the HL7 APPLICATION PARAMETER file (#771).

New Logical Link

A new HL7 logical link, PSO LLPO from the HL LOGICAL LINK file (#870), is being exported as the Logical Link of the PSO RECEIVE ORDER protocol. This link information will need to be edited to match the communication method of the interface if this interface is activated.

For any orders received from an external source, two new fields are stored with the Outpatient Pending Order and with the prescription, once the Pending Order is finished. These fields are EXTERNAL PLACER ORDER NUMBER field (#114) and EXTERNAL APPLICATION field (#116) in the PENDING OUTPATIENT ORDERS file (#52.41). These fields are also within the PRESCRIPTION file (#52) and are the EXTERNAL PLACER ORDER NUMBER field (#123) and EXTERNAL APPLICATION field (#124).

Any external systems that send orders through this interface to VistA must comply with having **unique** external placer order numbers within the orders from this system. This number is used for various look-ups within the interface, in conjunction with the EXTERNAL APPLICATION field (#116) in the PENDING OUTPATIENT ORDERS file (#52.41) and the EXTERNAL APPLICATION field (#124) in the PRESCRIPTION file (#52).

Any message sent through this interface to VistA, whether it is a New Order message or a Discontinue message must contain only one order per message. The interface is not set up to receive multiple orders per message.

HL7 Order Message Segment Definition Table

When the PSO RECEIVE ORDER protocol is enabled to process orders from an external system, the following table defines the data elements required for each segment of the incoming order message. This is a unilateral interface. No order information will be returned to the external system.

Segment	Piece	Description/Field Name	Data	Data Type
MSH	1	Field Separator	|	String
	2	Encoding Characters	^~\&	String
	3	Sending Application	Sending Application Name	String
	4	Sending Facility		String
	5	Receiving Application	PSO RECEIVE	String
	6	Receiving Facility		String
	9	Message Type	ORM^O01	Coded Value
	10	Message Control ID		String
	11	Processing ID	P	Coded Value
	12	Version ID	2.3.1	Coded Value
	15	Accept Acknowledgement	NE	Coded Value
	16	Application Acknowledgement	AL	Coded Value
	17	Country Code	USA	Coded Value
PID	3	Patient (pointer to File #2)	VistA IEN of Patient from File #2	Composite ID
	5	Patient Name		Person Name
PVI	3	Clinic (pointer to File #44)	VistA IEN of Hospital Location from File #44	Composite
ORC	1	Order Control Code	'NW'	Coded Value
	2	Placer Order Number*	External Placer Order Number	Composite
	9	Date/Time of Transaction	Current Date/Time	Time Stamp
	10	Entered By	VistA IEN of Provider from File #200	Composite ID Number and Name
	12	Ordering Provider	VistA IEN of Provider from File #200	Composite ID Number and Name
	15	Order Effective Date	Current Date/Time	Time Stamp
RXO	10	Dispense Drug	VistA IEN of Drug from File #50	Coded Element
	11	Quantity	Quantity	Numeric
	13	Number of Refills	Number of Refills	Numeric

Segment	Piece	Description/Field Name	Data	Data Type
NTE	6	Provider's Instructions to Dispensing Pharmacy	Free Text Provider Comments	String
	7	Patient's Instructions	Expanded Sig	String
ZRN	1	Non-VA	N	Coded Element (N=Non VA med)
	2	Statement/Reason	Non-VA Medication not recommended by VA provider or Medication prescribed by non-VA provider	String
ZRX	4	Routing	'W' (for Window)	String

* Field must contain unique data

The PSO RECEIVE ORDER protocol can also receive discontinue order messages. The following table gives the details of the fields that need to be received in the incoming order message.

Segment	Piece	Description/Field Name	Data	Data Type
MSH	1	Field Separator	|	String
	2	Encoding Characters	^~\&	String
	3	Sending Application	Sending Application Name	String
	4	Sending Facility		String
	5	Receiving Application	PSO RECEIVE	String
	6	Receiving Facility		String
	9	Message Type	ORM^O01	Coded Value
	10	Message Control ID		String
	11	Processing ID	P	Coded Value
	12	Version ID	2.3.1	Coded Value
	15	Accept Acknowledgement	NE	Coded Value
	16	Application Acknowledgement	AL	Coded Value
	16	Country Code	USA	Coded Value
PID	3	Patient (pointer to File #2)	VistA IEN of Patient from File #2	Composite ID
	5	Patient Name		Person Name
PVI	3	Clinic (pointer to File #44)	VistA IEN of Hospital Location from File #44	Composite
ORC	1	Order Control Code	'CA'	Coded Value

Segment	Piece	Description/Field Name	Data	Data Type
	2	Placer Order Number*	External Placer Order Number	Composite
	9	Date/Time of Transaction	Current Date/Time	Time Stamp
	10	Entered By	VistA IEN of Provider from File #200	Composite ID Number and Name
	12	Ordering Provider	VistA IEN of Provider from File #200	Composite ID Number and Name
	15	Order Effective Date	Current Date/Time	Time Stamp
ZRN	1	Non-VA	N	Coded Element (N=Non VA med)
	2	Statement/Reason	Non-VA Medication not recommended by VA provider or Medication prescribed by non-VA provider	String

* Field must contain unique data

An Application Acknowledgement message is returned for new and discontinue messages received from the external system. Sequence 1 (Acknowledgement Code) of the MSA segment will always be Application Accept (AA), regardless of whether or not the incoming message passed all of the exception checks. Sequence 3 (Text Message) of the MSA segment will be null if the message was accepted and passed all of the exception checks. If the message is rejected by the receiving application, Sequence 3 (Text Message) will contain the reason for the rejection.

Segment	Piece	Description/Field Name	Data	Data Type
MSH	1	Field Separator	|	String
	2	Encoding Characters	^~\&	String
	3	Sending Application	PSO RECEIVE	String
	4	Sending Facility	(Sending Facility)	String
	5	Receiving Application	(Receiving Application Name)	String
	6	Receiving Facility	(Receiving Facility)	String
	7	Date/time of Message	Current Date/Time	Time Stamp
	9	Message Type	ORR^O01	Coded Value
	10	Message Control ID		String
	11	Processing ID	P	Coded Value
	12	Version ID	2.3.1	Coded Value
	15	Accept Acknowledgement	NE	Coded Value
	16	Application Acknowledgement	NE	Coded Value

Segment	Piece	Description/Field Name	Data	Data Type
	17	Country Code	US	Coded Value
MSA	1	Acknowledgement Code	AA	Coded Value
	2	Message Control ID		String
	3	Text Message	(Null, or Rejection Reason)	String

Order Messaging Exceptions

Exceptions will occur when VistA rejects a new or discontinue order message. For new order messages, the rejections are largely based on the drug, provider, or patient associated with the prescription order.

Drug exceptions

- Drug is inactive (less than today's date)
- Drug is not marked for outpatient use
- Drug is not associated with a Pharmacy Orderable Item
- Invalid drug entry

Provider exceptions

- Provider is not authorized to write med orders
- Provider has an inactive date (date of today or less)
- Provider has a termination date (date of today or less)
- Provider does not hold the PROVIDER key
- Invalid provider entry

Patient exceptions

- Patient is deceased
- Invalid patient entry

Other exceptions

- Invalid NTE segment, greater than 245 characters
- Invalid message structure
- Missing MSH segment
- Missing PID segment
- Missing PVI segment
- Missing ORC segment
- Missing RXO segment
- External order, unable to successfully transmit to CPRS
- Unable to derive Institution from Clinic
- Unable to add order to Pending file
- Missing sending application name
- Invalid Order Control Code

- No Patient Location
- Missing CHCS Placer Order Number
- Duplicate order number in Outpatient Pending file
- Duplicate order number in Outpatient Prescription file
- Missing number of refills
- Missing effective date
- Missing Entered by data

For discontinue order messages, these are the possible exceptions:

Provider exceptions

- Provider is not authorized to write med orders
- Provider has an inactive date (date of today or less)
- Provider has a termination date (date of today or less)
- Provider does not hold the PROVIDER key
- Invalid provider entry

Other exceptions

- Invalid message structure
- Missing MSH segment
- Missing PID segment
- Missing ORC segment
- Missing sending application name
- Missing CHCS Placer Order Number
- Unable to find order in Pharmacy
- Patient mismatch in Pending order
- Pending order is being edited by another user
- Unable to cancel Pending order, status is HOLD
- Unable to cancel Pending order, status is RENEW
- Unable to cancel Pending order, status is DISCONTINUE (EDIT)
- Unable to cancel Pending order, status is DISCONTINUE
- Unable to cancel Pending order, status is REFILL REQUEST
- Patient mismatch in prescription
- Prescription is being edited by another user
- Unable to cancel prescription, status is DISCONTINUED
- Unable to cancel prescription, status is DELETED
- Unable to cancel prescription, status is DISCONTINUED BY PROVIDER
- Unable to cancel prescription, status is DISCONTINUED (EDIT)

Appendix C:

The Transitional Pharmacy Benefit (TPB) functionality has been placed “Out of Order” with the PSO*7*227 patch.

(This page included for two-sided copying.)

Appendix D:
HL7 Messaging for VistA Data Extraction Framework (VDEF)

*****Important*****

Patch PSO*7*190 should not be installed prior to the site's assigned HDR installation date. Each site will be contacted approximately two weeks prior to the assigned HDR installation date and provided instructions on when and in what order to install this patch and the VDEF V. 1.0 software. Additionally, sites should not configure or attempt to utilize the VDEF software associated with this patch prior to the assigned HDR installation date. Technical Support Office personnel will work with each site to activate that application and start the site's data transmissions to the HDR database. (Information on HDR installation dates can be found by going to the link <http://vaww.teamshare.va.gov/hdr_implementation/> and selecting "Implementation Schedule" from the Quick Launch panel on the left side of the page.).

Please refer to the VistA Data Extraction Framework (VDEF) Installation & User Configuration Guide for all technical assistance.

New Protocols

Patch PSO*7*190 adds six new protocols to the PROTOCOL file (#101) to facilitate the VistA Data Extraction Framework (VDEF) Outpatient Pharmacy messaging.

PROTOCOL: (VS = Event Driver protocol, HR = Subscriber protocol)

PSO VDEF RDE O11 OP PHARM PRES VS

PSO VDEF RDE O11 OP PHARM PRES HR

PSO VDEF RDS O13 OP PHARM PPAR VS

PSO VDEF RDS O13 OP PHARM PPAR HR

PSO VDEF RDS O13 OP PHARM PREF VS

PSO VDEF RDS O13 OP PHARM PREF HR

New Application Parameters

Patch PSO*7*190 adds four new HL7 application parameters to the HL7 APPLICATION PARAMETER file (#771):

HDRPPAR is exported as the Sending Application for the PSO VDEF RDS O13 OP PHARM PPAR VS protocol.

HDRPREF is exported as the Sending Application for the PSO VDEF RDS O13 OP PHARM PREF VS protocol.

HDRPRES is exported as the Sending Application for the PSO VDEF RDE O11 OP PHARM PRES VS protocol.

PSO VDEF IE SIDE is exported as the Receiving application for the three Subscriber protocols:

PSO VDEF RDE O11 OP PHARM PRES HR

PSO VDEF RDS O13 OP PHARM PPAR HR

PSO VDEF RDS O13 OP PHARM PREF HR

New Logical Link

There are currently four HL7 logical links (VDEFVIEn) exported with VDEF V. 1.0. The VDEFVIEn links will transmit messages from the local site to the HDR Receiving host system at Austin. VDEFVIE3 is the logical link assigned to Outpatient Pharmacy and it has been added to the HL LOGICAL LINK file (#870).

HL7 Outpatient Pharmacy VDEF Message

When particular events (listed below) occur to a prescription within the Outpatient Pharmacy package, a VDEF request will be queued up at the VDEF Request Queue, with the MessageType, EventType, SubType, and the internal entry number to the PRESCRIPTION file (#52). VDEF will then go through the VDEF Request Queue to generate an HL7 message that contains all of the prescription information and send the message to the Receiving Facility through the VDEFVIE3 Logical Link.

Outpatient Pharmacy VDEF messages will be generated when:

- A new order is entered through the Outpatient Pharmacy options
- A Pending Order from Computerized Patient Record System (CPRS) is finished in the Outpatient Pharmacy options
- A refill is entered for a prescription

- A partial fill for a prescription is entered
- All prescription status changes
- A Prescription is edited and does not create a new order

Example of VDEF HL7 Message

```
MSH^~|\&^HDRPREF^613~TEST.MARTINSBURG.MED.VA.GOV~DNS^PSO VDEF IE
SIDE^200HD~HDR.MED.VA.GOV~DNS^20041216192259-0500^^RDS~O13^61332594923^T^2.4^^^AL^NE^US
PID^1^1234567890V123456^1234567890V123456~~~USVHA&&0363~NI~VA FACILITY
ID&613&L|000654321~~~USSSA&&0363~SS~VA FACILITY ID&613&L|1234~~~USVHA&&0363~PI~VA FACILITY
ID&613&L|000654321~~~USVBA&&0363~PN~VA FACILITY
ID&613&L^^LastName~FirstName~M~~~~L^MotherMaidenLastName~~~~~~M^19150511^M^^"""^HC 11, BOX
22B~""~CAPON BRIDGE~WV~12345~~P~""|~~BARNESVILLE~MD~~~N^027^(123)555-
1212^""^^D^0^^000654321^^^""^BARNESVILLE MD^^^^^^20000301^^
ORC^RE^^1685567~613_52_.001^^CM^^~~~19950109~19960110~~FILL/EXPIRATION|~~~~19950109~~ISSUED|~
~~19950109~19950330~~DISPENSED/LAST DISPENSED|~~~~19950629~~CANCEL^^19950109123449-
0500^63~OPPROVIDER40~TWO~~~~~VistA200^^947~OPPROVIDER41~TWO~A~MD~~MD~RE^ CCS/HOME
VISIT~2559^^^613~MARTINSBURG VAMC~613_52_20~5005423~MARTINSBURG VAMC~NCPDP^^^^MARTINSBURG,
WV^^^^4500704~DISCONTINUED~99VA_52_100
RXE^1&100MG~~~19950109~19950629~~FILL/CANCEL^4005192~AMANTADINE HCL 100MG CAP~99VA_52_6~0781-
2048-
01~~NDC^0^^20~MG~613_52_6^63~CAP~613_50.7_.02^~TAKE~613_52.0113_8|~CAPSULE~613_52.0113_3|~Q8H
~613_52.0113_7|~QAMHS~613_52_114|~IN THE MORNING AND AT
BEDTIME~613_52_115^~~~~~WINDOW^^90^^1^^2992~OPPROVIDER42~THREE~M~~~~PHARMACIST^5430744^^^1995
0111170823-0500^^^TAKE ONE CAPSULE BY MOUTH EVERY EIGHT HOURS IN THE MORNING AND AT
BEDTIME~~613_52_10.2^D90^^^^^^^^^11135~ AMANTADINE HCL 100MG CAP ~613_50_.01|C0255~~613_50_27
RXR^1~ORAL (BY MOUTH)~613_52.0113_6
FT1^^^^19950109^^CG^620~AMANTADINE~~613_52_39.2^^^^^0.009^^^^^^ONSC^12345~FINISHING
PHARM~613_52_38
FT1^2^^^19950109^^CO^1~PSO NSC RX COPAY NEW~500_52_105
OBX^1^CE^WAS THE PATIENT COUNSELED^^4500633~YES~99VA_52_41^^^^^^F
OBX^2^CE^WAS COUNSELING UNDERSTOOD^^4500630~NO~99VA_52_42^^^^^^F
NTE^1^^RENEWED FROM RX # 123456^RE~REMARKS~613_52_12
ORC^RF^^1^^^^~~~19950330~~~DISPENSED^~1685567^19950306^^^947~OPPROVIDER41~TWO~A~MD~~MD~VistA2
00^^^^REFILL^613~MARTINSBURG
VAMC~613_52.1_8~5005423~MARTINSBURG VAMC~NCPDP^^^^MARTINSBURG, WV
RXE^~~~19950330~~~REFILL^4005192~AMANTADINE HCL 100MG CAP~99VA _52_6~0781-2048-01~~NDC
^0^^20~MG~613_52_6^^^~~~~~MAIL^^90^^^^2992~OPPROVIDER42~THREE~M~~~~PHARMACIST^^^^199503290934
-0500^^^^D90^^^^^^^^^11135~ AMANTADINE HCL 100MG CAP ~613_50_.01|C0255~~613_50_27
FT1^^^^19950330^^CG^620~AMANTADINE~~613_52_39.2^^^^^0.009
FT1^2^^^19950330^^CG^1~PSO NSC RX COPAY NEW~500_52_105
ORC^RF^^1^^^^^~1685567^199503061212-
0500^^^947~OPPROVIDER41~TWO~A~MD~~MD~VistA200^^^^PARTIAL^613~MARTINSBURG
VAMC~613 52.2 .09~5005423~MARTINSBURG VAMC~NCPDP^^^^MARTINSBURG, WV
RXE^~~~19950306~~~PARTIAL^4005192~AMANTADINE HCL 100MG CAP~99VA _52_6~0781-2048-01~~NDC
^0^^20~MG~613_52_6^^^~~~~~WINDOW^^30^^^^2992~OPPROVIDER42~THREE~M~~~~PHARMACIST^^^^1995030714
4822-0500^^^^D30^^^^^^^^^11135~ AMANTADINE HCL 100MG CAP ~613_50_.01|C0255~~613_50_27
NTE^^^PT OUT RX ON SUSP FOR 24 MORE DAYS^RE~REMARKS~613_50_27
FT1^^^^19950306^^CG^620~AMANTADINE~~613_52_39.2^^^^^0.009
FT1^2^^^19950306^^CG^1~PSO NSC RX COPAY NEW~500_52_105
```

HL7 Outpatient Pharmacy VDEF Message

Some data values in the following table represent VistA data fields that have been assigned VUIDs (VHA Unique Identifiers). In these instances, when a VUID is available, the data value will be the VUID, along with the appropriate coding scheme. If for some reason the VUID is not available, the data value will be the VistA data value, along with the appropriate coding scheme.

The exception to this format would be the data value for the coded element for Give Code in the segment RXE 2. If a VUID is available, the first three pieces would be:

VUID from the VA PRODUCT file (#50.68)

VA PRODUCT Name from the VA PRODUCT file (#50.68)

99VA_52_6

If a VUID is not available, for example if the local drug from the DRUG file (#50) is not matched to the National Drug File, the first three pieces would be:

Null

DRUG Name from the DRUG file (#50)

(Station Number)_52_6

Also in the following table, dosing information is sent in the RXE 1 segment. There are different formats for the dosing information, depending on the type of dosage. Here are examples, which include a possible dosage, a local possible dosage and a possible dosage with complex dosing instructions.

Example 1: This example is for a possible dosage, which is a numeric dosage, with a numeric dispense units per dose. These types of dosages are limited to single ingredient drugs, with a numeric strength, usually with a dosage form of tablets or capsules.

2&200MG~~10D~20050720~20060721~~FILL/EXPIRATION

The dosage in this case is 2&200MG~~10D, where 2 represents the dispense units per dose, 200MG represents the total dosage for the 2 tablets or capsules, and 10D represents the duration, which in this case is 10 days. (duration is optional)

Example 2: This example is for a local possible dosage, which is a text dosage, with no dispense units per dose. These types of dosages apply to items such as multi-ingredient drugs, creams, ointments, drops, etc.

&1 DROP~~~20050720~20060721~~FILL/EXPIRATION

The dosage in this case is &1 DROP~~~, where 1 DROP represents the dosage. Since it is a local possible dosage, there is no dispense units per dose, and in this case, there is no duration, though a duration can be applied to any type of dosage.

Example 3: This example is for a possible dosage, with complex dosing instructions.

1&100MG~~10D~20050720~20060721~~FILL/EXPIRATION|2&200MG~~5D
The first set of dosing instructions is 1&100MG~~10D, where 1 represents the dispense units per dose, 100MG represents the total dosage, and 10D represents a duration of 10 Days. The next set of dosing instructions is 2&200MG~~5D, where 2 represents the dispense units per dose, 200MG represents the total dosage, and 5D represents a duration of 5 Days.

Note: The dosage will only appear in the RXE segment associated with the original fill, it will not appear in RXE segments associated with refills or partial fills.

Example of VDEF HL7 Message Details

Segment	Piece/ Sequence	Description/ Field Name	Data Type	Data Value
MSH	1	Field Separator	ST	^
MSH	2	Encoding Characters	ST	~|\&
MSH	3	Sending Application	HD	HDRPREF
MSH	4	Sending Facility	HD	613~TEST.MARTINSBURG.MED.VA.GOV~DNS
MSH	5	Receiving Application	HD	PSO VDEF IE SIDE
MSH	6	Receiving Facility	HD	200HD~HDR.MED.VA.GOV~DNS
MSH	7	Date/Time Of Message	TS	20041216192259-0500
MSH	8	Security	ST	
MSH	9	Message Type	CM	RDS~O13
MSH	10	Message Control ID	ST	61332594923
MSH	11	Processing ID	PT	T
MSH	12	Version ID	VID	2.4
MSH	13	Sequence Number	NM	
MSH	14	Continuation Pointer	ST	
MSH	15	Accept Acknowledgment Type	ID	AL
MSH	16	Application Acknowledgment Type	ID	NE
MSH	17	Country Code	ID	US
MSH	18	Character Set	ID	
MSH	19	Principal Language Of Message	CE	

Segment	Piece/ Sequence	Description/ Field Name	Data Type	Data Value
MSH	20	Alternate Character Set Handling Scheme	ID	
MSH	21	Conformance Statement ID	ID	
PID	1	Set ID - PID	SI	1
PID	2	Patient ID	CX	1234567890V123456
PID	3	Patient Identifier List	CX	1234567890V123456~~~USVHA&&0363~NI~VA FACILITY ID&613&L
PID	3	Patient Identifier List_rep		000654321~~~USSSA&&0363~SS~VA FACILITY ID&613&L
PID	3	Patient Identifier List_rep		1234~~~USVHA&&0363~PI~VA FACILITY ID&613&L
PID	3	Patient Identifier List_rep		000654321~~~USVBA&&0363~PN~VA FACILITY ID&613&L
PID	4	Alternate Patient ID - PID	CX	654~~~USVHA&&0363~PI~VA FACILITY ID&742V1&L
PID	5	Patient Name	XPN	LastName~FirstName~M~~~~L
PID	6	Mother's Maiden Name	XPN	MotherMaidenLastName~~~~~~M
PID	7	Date/Time Of Birth	TS	19150511
PID	8	Administrative Sex	IS	M
PID	9	Patient Alias	XPN	
PID	10	Race	CE	""
PID	11	Patient Address	XAD	HC 11, BOX 22B~""~CAPON BRIDGE~WV~12345~~P~""
PID	11	Patient Address_rep		~~BARNESVILLE~MD~~~N
PID	12	County Code	IS	027
PID	13	Phone Number - Home	XTN	(123)555-1212
PID	14	Phone Number - Business	XTN	""
PID	15	Primary Language	CE	
PID	16	Marital Status	CE	D
PID	17	Religion	CE	0
PID	18	Patient Account Number	CX	
PID	19	SSN Number - Patient	ST	654321
PID	20	Driver's License Number - Patient	DLN	

Segment	Piece/ Sequence	Description/ Field Name	Data Type	Data Value
PID	21	Mother's Identifier	CX	
PID	22	Ethnic Group	CE	""
PID	23	Birth Place	ST	BARNESVILLE MD
PID	24	Multiple Birth Indicator	ID	
PID	25	Birth Order	NM	
PID	26	Citizenship	CE	
PID	27	Veterans Military Status	CE	
PID	28	Nationality	CE	
PID	29	Patient Death Date and Time	TS	20000301
PID	30	Patient Death Indicator	ID	
PID	31	Identity Unknown Indicator	ID	
PID	32	Identity Reliability Code	IS	
PID	33	Last Update Date/Time	TS	
PID	34	Last Update Facility	HD	
PID	35	Species Code	CE	
PID	36	Breed Code	CE	
PID	37	Strain	ST	
PID	38	Production Class Code	CE	
ORC	1	Order Control	ID	RE
ORC	2	Placer Order Number	EI	
ORC	3	Filler Order Number	EI	1685567~613_52_.001
ORC	4	Placer Group Number	EI	
ORC	5	Order Status	ID	CM
ORC	6	Response Flag	ID	
ORC	7	Quantity/ Timing	TQ	~~~19950109~19960110~~FILL/EXPIRATION
ORC	7	Quantity/ Timing_rep		~~~~19950109~~ISSUED
ORC	7	Quantity/ Timing_rep		~~~19950109~19950330~~DISPENSED/ LAST DISPENSED
ORC	7	Quantity/ Timing_rep		~~~~19950629~~CANCEL
ORC	8	Parent	CM	
ORC	9	Date/Time of Transaction	TS	19950109123449-0500

Segment	Piece/ Sequence	Description/ Field Name	Data Type	Data Value
ORC	10	Entered By	XCN	63~OPPROVIDER40~TWO~~~~~VistA200
ORC	11	Verified By	XCN	
ORC	12	Ordering Provider	XCN	947~OPPROVIDER41~TWO~A~MD~~MD~RE
ORC	13	Enterer's Location / Room (Hospital Location IEN~Clinic)	PL	CCS/HOME VISIT~2559
ORC	14	Call Back Phone Number	XTN	
ORC	15	Order Effective Date/Time	TS	
ORC	16	Order Control Code Reason	CE	
ORC	17	Entering Organization	CE	613~MARTINSBURG VAMC~613_52_20~5005423~MARTINSBURG VAMC~NCPDP
ORC	18	Entering Device	CE	
ORC	19	Action By	XCN	
ORC	20	Advanced Beneficiary Notice Code	CE	
ORC	21	Ordering Facility Name	XON	MARTINSBURG, WV
ORC	22	Ordering Facility Address	XAD	
ORC	23	Ordering Facility Phone Number	XTN	
ORC	24	Ordering Provider Address	XAD	
ORC	25	Order Status Modifier (If CMOP drug, send CMOP status)	CWE	4500704~DISCONTINUED~99VA_52_100 **OR** 12~DISCONTINUED~613_52_100
RXE	1	Quantity/Timing	TQ	1&100MG~~~19950109~19950629~~FILL/CANCEL
RXE	2	Give Code	CE	4005192~AMANTADINE HCL 100MG CAP~99VA_52_6~0781-2048-01~~NDC **OR** ~AMANTADINE 100MG CAP~613_52_6~0781-2048-01~~NDC
RXE	3	Give Amount - Minimum	NM	0

Segment	Piece/ Sequence	Description/ Field Name	Data Type	Data Value
RXE	4	Give Amount - Maximum	NM	
RXE	5	Give Units	CE	20~MG~613_52_6
RXE	6	Give Dosage Form	CE	63~CAP~613_50.7_.02 **OR** if VUID exists 63~CAP~613_50.7_.02~11111~CAP~99VA__50.7_.02
RXE	7(n)	Verb, Noun, Schedule, Conjunction	CE	~TAKE~613_52.0113_8|~CAPSULE~613_52.0113_3|~Q8H~613_52.0113_7
RXE	7(n)	Patient Instructions	CE	~QAMHS~613_52_114
RXE	7(n)	Expanded Patient Instructions	CE	~IN THE MORNING AND AT BEDTIME~613_52_115
RXE	8	Deliver-To Location	CM	~~~~~WINDOW
RXE	9	Substitution Status	ID	
RXE	10	Dispense Amount	NM	90
RXE	11	Dispense Units	CE	
RXE	12	Number of Refills	NM	1
RXE	13	Ordering Provider's DEA Number	XCN	
RXE	14	Pharmacist/Treatment Supplier's Verifier ID	XCN	2992~OPPROVIDER42~THREE~M~~~~PHARMACIST
RXE	15	Prescription Number	ST	5430744
RXE	16	Number of Refills Remaining	NM	
RXE	17	Number of Refills/Doses Dispensed	NM	
RXE	18	D/T of Most Recent Refill or Dose Dispensed	TS	19950111170823-0500
RXE	19	Total Daily Dose	CQ	
RXE	20	Needs Human Review	ID	
RXE	21	Pharmacy/Treatment Supplier's Special Dispensing Instructions	CE	TAKE ONE CAPSULE BY MOUTH EVERY EIGHT HOURS IN THE MORNING AND AT BEDTIME~~613_52_10.2
RXE	22	Give Per (Time Unit)	ST	D90
RXE	23	Give Rate Amount	ST	
RXE	24	Give Rate Units	CE	
RXE	25	Give Strength	NM	
RXE	26	Give Strength Units	CE	

Segment	Piece/ Sequence	Description/ Field Name	Data Type	Data Value
RXE	27	Give Indication	CE	
RXE	28	Dispense Package Size	NM	
RXE	29	Dispense Package Size Unit	CE	
RXE	30	Dispense Package Method	ID	
RXE	31(n)	Supplementary Code: Local Drug	ST	11135~AMANTADINE HCL 100MG CAP~613_50_.01
RXE	31(n)	Supplementary Code: CMOP ID		C0255~~613_50_27
RXR	1	Route	CE	1~ORAL (BY MOUTH)~613_52.0113_6
RXR	2		CE	
RXR	3		CE	
RXR	4		CE	
RXR	5		CE	
FT1	1	Set ID - FT1	SI	
FT1	2	Transaction ID	ST	
FT1	3	Transaction Batch ID	ST	
FT1	4	Transaction Date	TS	19950109
FT1	5	Transaction Posting Date	TS	
FT1	6	Transaction Type	IS	CG
FT1	7	Transaction Code	CE	620~AMANTADINE~~613_52_39.2
FT1	8	Transaction Description	ST	
FT1	9	Transaction Description - Alt	ST	
FT1	10	Transaction Quantity	NM	
FT1	11	Transaction Amount - Extended	CP	
FT1	12	Transaction Amount - Unit	CP	0.009
FT1	13	Department Code	CE	
FT1	14	Insurance Plan ID	CE	
FT1	15	Insurance Amount	CP	
FT1	16	Assigned Patient Location	PL	
FT1	17	Fee Schedule	IS	

Segment	Piece/ Sequence	Description/ Field Name	Data Type	Data Value
FT1	18	Patient Type	IS	ONSC
FT1	19	Diagnosis Code - FT1	CE	
FT1	20	Performed By Code	XCN	12345~FINISHING PHARM~613_52_38
FT1	21	Ordered By Code	XCN	
FT1	22	Unit Cost	CP	
FT1	23	Filler Order Number	EI	
FT1	24	Entered By Code	XCN	
FT1	25	Procedure Code	CE	
FT1	26	Procedure Code Modifier	CE	
FT1	1	Set ID - FT1	SI	
FT1	2	Transaction ID	ST	
FT1	3	Transaction Batch ID	ST	
FT1	4	Transaction Date	TS	19950109
FT1	5	Transaction Posting Date	TS	
FT1	6	Transaction Type	IS	CO
FT1	7	Transaction Code	CE	1~PSO NSC RX COPAY NEW~500_52_105
OBX	1	Set ID - OBX	SI	1
OBX	2	Value Type	ID	CE
OBX	3	Observation Identifier	CE	WAS THE PATIENT COUNSELED
OBX	4	Observation Sub-Id	ST	
OBX	5	Observation Value	CE	4500633~YES~99VA_52_41 **OR** 1~YES~613_52_41
OBX	6	Units	CE	
OBX	7	References Range	ST	
OBX	8	Abnormal Flags	IS	
OBX	9	Probability	NM	
OBX	10	Nature of Abnormal Test	ID	
OBX	11	Observation Result Status	ID	F
OBX	12	Date Last Observation Normal Value	TS	
OBX	13	User Defined Access Checks	ST	

Segment	Piece/ Sequence	Description/ Field Name	Data Type	Data Value
OBX	14	Date/Time of the Observation	TS	
OBX	15	Producer's ID	CE	
OBX	16	Responsible Observer	XCN	
OBX	17	Observation Method	CE	
OBX	18	Equipment Instance Identifier	EI	
OBX	19	Date/Time of the Analysis	TS	
OBX	1	Set ID - OBX	SI	2
OBX	2	Value Type	ID	CE
OBX	3	Observation Identifier	CE	WAS COUNSELING UNDERSTOOD
OBX	4	Observation Sub-Id	ST	
OBX	5	Observation Value	CE	4500630~NO~99VA_52_42 **OR** 0~NO~613_52_42
OBX	6	Units	CE	
OBX	7	References Range	ST	
OBX	8	Abnormal Flags	IS	
OBX	9	Probability	NM	
OBX	10	Nature of Abnormal Test	ID	
OBX	11	Observation Result Status	ID	F
OBX	12	Date Last Observation Normal Value	TS	
OBX	13	User Defined Access Checks	ST	
OBX	14	Date/Time of the Observation	TS	
OBX	15	Producer's ID	CE	
OBX	16	Responsible Observer	XCN	
OBX	17	Observation Method	CE	
OBX	18	Equipment Instance Identifier	EI	
OBX	19	Date/Time of the Analysis	TS	
NTE	1	Set ID - NTE	SI	1
NTE	2	Source of Comment	ID	

Segment	Piece/ Sequence	Description/ Field Name	Data Type	Data Value
NTE	3	Comment	FT	RENEWED FROM RX # 123456
NTE	4	Comment Type	CE	RE~REMARKS~613_52_12
ORC	1	Order Control	ID	RF
ORC	2	Placer Order Number	EI	
ORC	3	Filler Order Number	EI	1
ORC	4	Placer Group Number	EI	
ORC	5	Order Status	ID	
ORC	6	Response Flag	ID	
ORC	7	Quantity/Timing	TQ	~~~19950330~~~DISPENSED
ORC	8	Parent	CM	~1685567
ORC	9	Date/Time of Transaction	TS	19950306
ORC	10	Entered By	XCN	
ORC	11	Verified By	XCN	
ORC	12	Ordering Provider	XCN	947~OPPROVIDER41~TWO~A~MD~~ MD~VistA200
ORC	13	Enterer's Location	PL	
ORC	14	Call Back Phone Number	XTN	
ORC	15	Order Effective Date/Time	TS	
ORC	16	Order Control Code Reason	CE	REFILL
ORC	17	Entering Organization	CE	613~MARTINSBURG VAMC~613_52.1_8~5005423~MARTINS BURG VAMC~NCPDP
ORC	18	Entering Device	CE	
ORC	19	Action By	XCN	
ORC	20	Advanced Beneficiary Notice Code	CE	
ORC	21	Ordering Facility Name	XON	MARTINSBURG, WV
ORC	22	Ordering Facility Address	XAD	
ORC	23	Ordering Facility Phone Number	XTN	
ORC	24	Ordering Provider Address	XAD	
ORC	25	Order Status Modifier	CWE	
RXE	1	Quantity/Timing	TQ	~~~19950330~~~REFILL

Segment	Piece/ Sequence	Description/ Field Name	Data Type	Data Value
RXE	2	Give Code	CE	4005192~AMANTADI NE HCL 100MG CAP~99VA_52_6~0781-2048-01~~NDC **OR** ~AMANTADINE 100MG CAP~613_52_6~0781-2048-01~~NDC
RXE	3	Give Amount - Minimum	NM	0
RXE	4	Give Amount - Maximum	NM	
RXE	5	Give Units	CE	20~MG~613_52_6
RXE	6	Give Dosage Form	CE	20~MG~613_52_6
RXE	7	Provider's Administration Instructions	CE	
RXE	8	Deliver-To Location	CM	~~~~~MAIL
RXE	9	Substitution Status	ID	
RXE	10	Dispense Amount	NM	90
RXE	11	Dispense Units	CE	
RXE	12	Number of Refills	NM	
RXE	13	Ordering Provider's DEA Number	XCN	
RXE	14	Pharmacist/Treatment Supplier's Verifier ID	XCN	2992~OPPROVIDER42~THREE~M~~~~ PHARMACIST
RXE	15	Prescription Number	ST	
RXE	16	Number of Refills Remaining	NM	
RXE	17	Number of Refills/Doses Dispensed	NM	
RXE	18	D/T of Most Recent Refill or Dose Dispensed	TS	199503290934-0500
RXE	19	Total Daily Dose	CQ	
RXE	20	Needs Human Review	ID	
RXE	21	Pharmacy/Treatment Supplier's Special Dispensing Instructions	CE	
RXE	22	Give Per (Time Unit)	ST	D90
RXE	23	Give Rate Amount	ST	
RXE	24	Give Rate Units	CE	
RXE	25	Give Strength	NM	
RXE	26	Give Strength Units	CE	

Segment	Piece/ Sequence	Description/ Field Name	Data Type	Data Value
RXE	27	Give Indication	CE	
RXE	28	Dispense Package Size	NM	
RXE	29	Dispense Package Size Unit	CE	
RXE	30	Dispense Package Method	ID	
RXE	31(n)	Supplementary Code: Local Drug	ST	11135~AMANTADINE HCL 100MG CAP~613_50_.01
RXE	31(n)	Supplementary Code: CMOP ID		C0255~~613_50_27
FT1	1	Set ID - FT1	SI	
FT1	2	Transaction ID	ST	
FT1	3	Transaction Batch ID	ST	
FT1	4	Transaction Date	TS	19950330
FT1	5	Transaction Posting Date	TS	
FT1	6	Transaction Type	IS	CG
FT1	7	Transaction Code (Pharmacy Orderable Item/Name, Coding System)	CE	620~AMANTADINE~~613_52_39.2
FT1	8	Transaction Description	ST	
FT1	9	Transaction Description - Alt	ST	
FT1	10	Transaction Quantity	NM	
FT1	11	Transaction Amount - Extended	CP	
FT1	12	Transaction Amount - Unit	CP	0.009
FT1	1	Set ID - FT1	SI	
FT1	2	Transaction ID	ST	
FT1	3	Transaction Batch ID	ST	
FT1	4	Transaction Date	TS	19950330
FT1	5	Transaction Posting Date	TS	
FT1	6	Transaction Type	IS	CG
FT1	7	Transaction Code	CE	1~PSO NSC RX COPAY NEW~500_52_105
ORC	1	Order Control	ID	RF

Segment	Piece/ Sequence	Description/ Field Name	Data Type	Data Value
ORC	2	Placer Order Number	EI	
ORC	3	Filler Order Number	EI	1
ORC	4	Placer Group Number	EI	
ORC	5	Order Status	ID	
ORC	6	Response Flag	ID	
ORC	7	Quantity/Timing	TQ	
ORC	8	Parent	CM	~1685567
ORC	9	Date/Time of Transaction	TS	199503061212-0500
ORC	10	Entered By	XCN	
ORC	11	Verified By	XCN	
ORC	12	Ordering Provider	XCN	947~OPPROVIDER41~TWO~A~MD~~MD~VistA200
ORC	13	Enterer's Location	PL	
ORC	14	Call Back Phone Number	XTN	
ORC	15	Order Effective Date/Time	TS	
ORC	16	Order Control Code Reason	CE	PARTIAL
ORC	17	Entering Organization	CE	613~MARTINSBURG VAMC~613_52.2_.09~5005423~MARTINSBURG VAMC~NCPDP
ORC	18	Entering Device	CE	
ORC	19	Action By	XCN	
ORC	20	Advanced Beneficiary Notice Code	CE	
ORC	21	Ordering Facility Name	XON	MARTINSBURG, WV
ORC	22	Ordering Facility Address	XAD	
ORC	23	Ordering Facility Phone Number	XTN	
ORC	24	Ordering Provider Address	XAD	
ORC	25	Order Status Modifier	CWE	
RXE	1	Quantity/Timing	TQ	~~~19950306~~~PARTIAL

Segment	Piece/ Sequence	Description/ Field Name	Data Type	Data Value
RXE	2	Give Code	CE	4005192~AMANTADI NE HCL 100MG CAP~99VA_52_6~0781-2048-01~~NDC **OR** ~AMANTADINE 100MG CAP~613_52_6~0781-2048-01~~NDC
RXE	3	Give Amount - Minimum	NM	0
RXE	4	Give Amount - Maximum	NM	
RXE	5	Give Units	CE	20~MG~613_52_6
RXE	6	Give Dosage Form	CE	
RXE	7	Provider's Administration Instructions	CE	
RXE	8	Deliver-To Location	CM	~~~~~WINDOW
RXE	9	Substitution Status	ID	
RXE	10	Dispense Amount	NM	30
RXE	11	Dispense Units	CE	
RXE	12	Number of Refills	NM	
RXE	13	Ordering Provider's DEA Number	XCN	
RXE	14	Pharmacist/Treatment Supplier's Verifier ID	XCN	2992~OPPROVIDER42~THREE~M~~~~ PHARMACIST
RXE	15	Prescription Number	ST	
RXE	16	Number of Refills Remaining	NM	
RXE	17	Number of Refills/Doses Dispensed	NM	
RXE	18	D/T of Most Recent Refill or Dose Dispensed	TS	19950307144822-0500
RXE	19	Total Daily Dose	CQ	
RXE	20	Needs Human Review	ID	
RXE	21	Pharmacy/Treatment Supplier's Special Dispensing Instructions	CE	
RXE	22	Give Per (Time Unit)	ST	D30
RXE	23	Give Rate Amount	ST	
RXE	24	Give Rate Units	CE	
RXE	25	Give Strength	NM	
RXE	26	Give Strength Units	CE	
RXE	27	Give Indication	CE	

Segment	Piece/ Sequence	Description/ Field Name	Data Type	Data Value
RXE	28	Dispense Package Size	NM	
RXE	29	Dispense Package Size Unit	CE	
RXE	30	Dispense Package Method	ID	
RXE	31(n)	Supplementary Code: Local Drug	ST	11135~AMANTADINE HCL 100MG CAP~613_50_.01
RXE	31(n)	Supplementary Code: CMOP ID		C0255~~613_50_27
NTE	1	Set ID - NTE	SI	
NTE	2	Source of Comment	ID	
NTE	3	Comment	FT	PT OUT RX ON SUSP FOR 24 MORE DAYS
NTE	4	Comment Type~Name of Coding System	CE	RE~REMARKS~613_50_27
FT1	1	Set ID - FT1	SI	
FT1	2	Transaction ID	ST	
FT1	3	Transaction Batch ID	ST	
FT1	4	Transaction Date	TS	19950306
FT1	5	Transaction Posting Date	TS	
FT1	6	Transaction Type	IS	CG
FT1	7	Transaction Code (Pharmacy Orderable Item/Name, Coding System)	CE	620~AMANTADINE~~613_52_39.2
FT1	8	Transaction Description	ST	
FT1	9	Transaction Description - Alt	ST	
FT1	10	Transaction Quantity	NM	
FT1	11	Transaction Amount - Extended	CP	
FT1	12	Transaction Amount - Unit	CP	0.009
FT1	1	Set ID - FT1	SI	
FT1	2	Transaction ID	ST	
FT1	3	Transaction Batch ID	ST	
FT1	4	Transaction Date	TS	19950306
FT1	5	Transaction Posting Date	TS	

Segment	Piece/ Sequence	Description/ Field Name	Data Type	Data Value
FT1	6	Transaction Type	IS	CG
FT1	7	Transaction Code	CE	1~PSO NSC RX COPAY NEW~500_52_105

Appendix E:
Outpatient Pharmacy ASAP Standard for Prescription Monitoring Programs (PMP)

Introduction

The data elements in this standard include those described in the Prescription Monitoring Program Model Act of October 2002 developed by the Alliance of States with Prescription Monitoring Programs and the National Association of State Controlled Substances Authorities.

Per the model act, the information submitted for each prescription, should include, but not be limited to:

- Dispenser identification number
- Date prescription filled
- Prescription number
- Prescription is new or is a refill
- NDC for drug dispensed
- Quantity dispensed
- Number of days supply of the drug
- Patient identification number
- Patient name
- Patient address
- Patient date of birth
- Prescriber identification number
- Date prescription issued by prescriber
- Person who received the prescription from the dispenser, if other than the patient
- Source of payment for prescription
- State issued serial number (If state chooses to establish a serialized prescription system.)

Safety Updates for Medication Prescription Management (SUMPM)
Patch *7*408 – State Prescription Drug Monitoring Program

The State Prescription Monitoring Program (SPMP) menu is used to identify prescriptions for controlled substance drugs, Schedule 2 through 5, dispensed by the VA Outpatient Pharmacy facilities, and to create and transmit an export file containing this information to the Prescription Drug Monitoring Programs (PDMP) of each state. This menu allows Veterans Health Administration (VA) Outpatient Pharmacies to comply with mandatory reporting to State Controlled Substance Rx databases as required by the Consolidated Appropriations Act, 2012, PL 112-74.

Each state has established its own PDMP to manage an electronic database that collects designated data on dispensed controlled substances. States distribute data from the database to individuals authorized under state law to receive the information for purposes of their profession. The information is reported to the state using the American Society for Automation in Pharmacy (ASAP) data format, which was developed by the Alliance of States with Prescription Monitoring Programs and the National Association of State Controlled Substances Authorities.

> **Note:** Prescription fills **Administered in Clinic** will not be sent to the states. Only outpatient prescriptions (new and updated) dispensed to patients will be submitted to the states.

ASAP Segment Hierarchy Layout

```
TH — Transaction Header (one per file)
   IS — Information Source (one per TH)
      PHA — Pharmacy Header (one to 2,000 per IS)
         PAT — Patient Information (one to 25,000 per PHA)
            DSP — Dispensing Record (one to 300 per PAT)
               PRE — Prescriber Information (one per DSP)
               CDI — Compound Drug Ingredient Detail (zero to 25 per DSP)
               AIR — Additional Information Reporting (zero to one per DSP)
         PAT — Patient Information
            DSP — Dispensing Record
               PRE — Prescriber Information
               CDI — Compound Drug Ingredient Detail
               AIR — Additional Information Reporting
            DSP — Dispensing Record
               PRE — Prescriber Information
               CDI — Compound Drug Ingredient Detail
               AIR — Additional Information Reporting
            DSP — Dispensing Record
               PRE — Prescriber Information
               CDI — Compound Drug Ingredient Detail
               AIR — Additional Information Reporting
         PAT — Patient Information
            DSP — Dispensing Record
               PRE — Prescriber Information
               CDI — Compound Drug Ingredient Detail
               AIR — Additional Information Reporting
      TP — Pharmacy Trailer (one per PHA)
      PHA — Pharmacy Header
         PAT — Patient Information
            DSP — Dispensing Record
               PRE — Prescriber Information
               CDI — Compound Drug Ingredient Detail
               AIR — Additional Information Reporting
         PAT — Patient Information
            DSP — Dispensing Record
               PRE — Prescriber Information
               CDI — Compound Drug Ingredient Detail
               AIR — Additional Information Reporting
      TP — Pharmacy Trailer
TT — Transaction Trailer (one per TH)
```

SPMP Data Source (PSO*7*408)

Data Element	Name Description	Data Source
TH–Transaction Header		
TH01	Version/Release Number Code uniquely identifying the transaction Format = xx.x	**File**: SPMP STATE PARAMETERS (#58.41) **Field**: ASAP VERSION field (#1) **Option**: View/Edit SPMP State Parameters [PSO SPMP STATE PARAMETERS] **Example**: 4.0, 4.1, 4.2
TH02	Transaction Control Number Sender-assigned code uniquely identifying a transaction This number must be used in TT01	ASAP 3.0 : Business Partner Implementation Version (Not Used) ASAP 4.0+: Transaction Control Number VA Site Number – Export Batch Number **Example**: 500-3038
TH03	Transaction Type Identifies the purpose of initiating the transaction 01 Send/Request Transaction 02 Acknowledgment (Used in Response only) 03 Error Receiving (Used in Response only) 04 Void (Used to void a specific Rx in a real-time transmission, or an entire batch file that was transmitted)	ASAP 3.0 : Transaction Control Number ASAP 4.0+: Transaction Type (Always "01" - Send/Request Transaction)
TH04	Response ID Contains the Transaction Control Number of a transaction that initiated the transaction Required in response transaction only	ASAP 3.0 : Transaction Type (Not Used) ASAP 4.0+: Response ID (Not Used)
TH05	Creation Date Date the transaction was created Format: CCYYMMDD	ASAP 3.0 : Message Type (Not Used) ASAP 4.0+: Creation Date (Format: YYYYMMDD) Date the Export Batch was created **Example**: 20130115
TH06	Creation Time Time the transaction was created Format: HHMMSS or HHMM	ASAP 3.0 : Response ID (Not Used) ; ASAP 4.0+: Creation Time. Format: HHMMSS or HHMM Time the Export Batch was created **Example**: 091522
TH07	File Type Code specifying the type of transaction P Production T Test	ASAP 3.0: Project ID (Not Used) ASAP 4.0+: File Type. • **P** is reported when running from a production account • **T** is reported when running from a non-production account

Data Element	Name Description	Data Source
TH08	Routing Number This field is reserved for real-time transmissions that go through a network switch to indicate, if necessary, the specific state PMP to whom the transactions should be routed	ASAP 3.0: Creation Date (Format: YYYYMMDD) ASAP 4.0 : Composite Element Separator (:) ASAP 4.1+: Routing Number (Real-time transactions only) (Not Used)
TH09	Segment Terminator Character This terminates the TH segment and sets the actual value of the data segment terminator for the entire transaction	ASAP 3.0: Creation Time. Format: HHMMSS or HHMM ASAP 4.0+: Segment Terminator Character • For ASAP version 4.0, the separator is set to "\" (backward slash) • For ASAP version 4.0, 4.1 and 4.2, the separator is set to "~" (tilde)
TH10	File Type Code specifying the type of transaction P Production T Test	ASAP 3.0 only • **P** is reported when running from a production account • **T** is reported when running from a non-production account
TH11	Message Free-form text message.	ASAP 3.0 only (not used)
TH12	Composite Element Separator The delimiter used to separate component data elements within a composite data structure.	ASAP 3.0 only
TH13	Data Segment Terminator Character This terminates the TH segment and sets the actual value of the data segment terminator for the entire transaction set. Note: This Data Element was released as NOT USED because ASAP 3.0 does not require the actual segment terminator value to be in the TH13 field.	ASAP 3.0 only
IS–Information Source		
IS01	Unique Information Source ID Reference number or identification number as defined by the business partners Example: Phone number	VA concatenated with the VA Site Number **Example**: VA500
IS02	Information Source Entity Name Entity name of the Information Source	**File**: INSTITUTION (#4) **Field**: OFFICIAL VA NAME (#100) **Example**: OKLAHOMA CITY VA MEDICAL CENTER
IS03	Message Free-form text for a message Used for more detailed information if required by the PMP	Not Used
IS04-IS10	ASAP 3.0 only	Not Used

Data Element	Name Description	Data Source
IR–Information Receiver (ASAP 3.0 Only		
IR01	Unique Information Receiver ID Reference number or identification number as defined by the business partners Example: Phone number	VA concatenated with the VA Site Number **Example**: VA500
IR02	Information Receiver Entity Name Entity name of the Information Receiver	**File**: STATE (#5) **Field**: NAME (#.01) Concatenated with “PMP PROGRAM” **Example**: OKLAHOMA PMP PROGRAM
IR03-IR10	ASAP 3.0 only	Not Used
PHA–Pharmacy Header		
PHA01	National Provider Identifier (NPI) Identifier assigned to the pharmacy by Centers for Medicare and Medicaid Services (CMS) Used if required by the PMP	Retrieved via the Kernel API $$NPI^XUSNPI (DBIA # 4532) using the NPI INSTITUTION field (#101) in the OUTPATIENT SITE file (#59) **Example**: 1043278211
PHA02	NCPDP/NABP Provider ID Identifier assigned to the pharmacy by the NCPDP/NABP. Used if required by the PMP	**File**: OUTPATIENT SITE (#59) **Field**: NCPDP NUMBER (#1008) **Option**: Site Parameter Enter/Edit [PSO SITE PARAMETERS] **Example**: 3706972
PHA03	DEA Number Identifier assigned to the pharmacy by the Drug Enforcement Administration (DEA) Used if required by the PMP	Retrieved via the Kernel API $$WHAT^XUAF4 (DBIA # 2171) using the RELATED INSTITUTION field (#100) in the OUTPATIENT SITE file (#59) **Example**: AV4597211
PHA04	Pharmacy Name or Dispensing Prescriber Name Free-form text for the name of the pharmacy	**File**: OUTPATIENT SITE (#59) **Field**: NAME (#.01) **Option**: Site Parameter Enter/Edit [PSO SITE PARAMETERS] **Example**: OKLAHOMA CITY
PHA05	Address Information – 1 Free-form text for address information	**File**: OUTPATIENT SITE (#59) **Field**: MAILING FRANK STREET (#.02) **Option**: Site Parameter Enter/Edit [PSO SITE PARAMETERS] **Example**: 921 N.E. 13th. Street (119)
PHA06	Address Information – 2 Free-form text for additional address information	Not Used

Data Element	Name Description	Data Source
PHA07	City Address Free-form text for city name	**File**: OUTPATIENT SITE (#59) **Field**: MAILING FRANK CITY (#.07) **Option**: Site Parameter Enter/Edit [PSO SITE PARAMETERS] **Example**: OKLAHOMA CITY
PHA08	State Address U.S. Postal Service state code	**File**: STATE (#5) **Field**: ABBREVIATION (#1) **Option**: Site Parameter Enter/Edit [PSO SITE PARAMETERS] Example: OK **Note**: The pointer to STATE file (#5) is retrieved from OUTPATIENT SITE file (#59) MAILING FRANK STATE field (#.08).
PHA09	ZIP Code Address U.S. Postal Service ZIP code Use if available	**File**: OUTPATIENT SITE (#59) **Field**: MAILING FRANK ZIP+4 CODE (#.05) **Option**: Site Parameter Enter/Edit [PSO SITE PARAMETERS] **Example**: 731045028 (no dash)
PHA10	Phone Number Complete phone number including area code	**File**: OUTPATIENT SITE (#59) **Field**: PHONE NUMBER (#.04) **Option**: Site Parameter Enter/Edit [PSO SITE PARAMETERS] **Example**: 4056948387 (no dashes)
PHA11	Contact Name Free-form text for contact name	Not Used
PHA12	Chain Site ID Store number assigned by the chain to the pharmacy location Used when PMP needs to identify the specific pharmacy from which information is required	Not Used
PHA13	Message Free-form text message	Not Used
PAT–Patient Information		
PAT01	ID Qualifier of Patient Identifier Code identifying the jurisdiction that issues the ID in PAT03 Used if the PMP requires such identification	Always **US** (United States), except ASAP 3.0 (not used)

Data Element	Name Description	Data Source
PAT02	ID Qualifier Code to identify the type of ID in PAT03. If PAT02 is used, PAT03 is required 01 Military ID 02 State Issued ID 03 Unique System ID 04 Permanent Resident Card (Green Card) 05 Passport ID 06 Driver's License ID 07 Social Security Number 08 Tribal ID 99 Other (Trading partner agreed upon ID, such as cardholder ID)	Always **07** (Social Security Number)
PAT03	ID of Patient Identification number for the patient as indicated in PAT02 An example would be the driver's license number	ASAP 3.0 : Unique System ID - Patient (Not Used) ASAP 4.0+: ID of Patient (SSN) Retrieved via the Kernel API $$DEM^VADPT (DBIA #10061) return variable VADM(2) **Example**: 666554444 (no dashes)
PAT04	ID Qualifier of Additional Patient Identifier Code identifying the jurisdiction that issues the ID in PAT06 Used if the PMP requires such identification	ASAP 3.0 : SSN Retrieved via the Kernel API $$DEM^VADPT (DBIA #10061) return variable VADM(2) **Example**: 666554444 (no dashes) ASAP 4.0+: ID Qualifier of Additional Patient Identifier (Not Used)
PAT05	Additional Patient ID Qualifier Code to identify the type of ID in PAT06 if the PMP requires a second identifier If PAT05 is used, PAT06 is required 01 Military ID 02 State Issued ID 03 Unique System ID 04 Permanent Resident Card (Green Card) 05 Passport ID 06 Driver's License ID 07 Social Security Number 08 Tribal ID 99 Other (Trading partner agreed upon ID, such as cardholder ID)	Not Used
PAT06	Additional ID Identification that might be required by the PMP to further identify the individual	Not Used

Data Element	Name Description	Data Source
	An example: in PAT03, driver's license is required and in PAT06, Social Security number is also required	
PAT07	Last Name Patient's last name	Retrieved via the Kernel API $$DEM^VADPT (DBIA #10061) return variable VADM(1) – first value before the comma (e.g., SMITH, JOHN F) **Example**: SMITH
PAT08	First Name Patient's first name	Retrieved via the Kernel API $$DEM^VADPT (DBIA #10061) return variable VADM(1) – first value after the comma and before blank space (e.g., SMITH, JOHN F) Example: JOHN
PAT09	Middle Name Patient's middle name or initial if available Used if available in pharmacy system and required by the PMP	Retrieved via the Kernel API $$DEM^VADPT (DBIA #10061) return variable VADM(1) –value following the first name (e.g., SMITH, JOHN F) Example: F
PAT10	Name Prefix Patient's name prefix such as Mr. or Dr. Used if available in pharmacy system and required by the PMP	Not Used
PAT11	Name Suffix Patient's name prefix such as Jr. or the III Used if available in pharmacy system and required by the PMP	Not Used
PAT12	Address Information – 1 Free-form text for street address information	Retrieved via the Registration API $$ADD^VADPT (DBIA #10061) return variable VAPA(1) **Example**: 1235 STREET NAME ST
PAT13	Address Information – 2 Free-form text for additional address information, if required by the PMP and is available in the pharmacy system	Retrieved via the Registration API $$ADD^VADPT (DBIA #10061) return variable VAPA(2) **Example**: BLDG 101 APT #102
PAT14	City Address Free-form text for city name	Retrieved via the Registration API $$ADD^VADPT (DBIA #10061) return variable VAPA(4) **Example**: ARDMORE
PAT15	State Address U.S. Postal Service state code if required by the PMP **Note:** Field was sized to handle international patients not residing in the U.S.	Retrieved via the Registration API $$ADD^VADPT (DBIA #10061) return variable VAPA(5) Example: OK

Data Element	Name Description	Data Source
PAT16	ZIP Code Address U.S. Postal Service ZIP code Populate with zeros if the patient address is outside the U.S.	Retrieved via the Registration API $$ADD^VADPT (DBIA #10061) return variable VAPA(6) **Example**: 723005500 (no dash)
PAT17	Phone Number Complete phone number including the area code when the PMP requires and is available in the pharmacy system	Retrieved via the Registration API $$ADD^VADPT (DBIA #10061) return variable VAPA(8) **Example**: 4245556666 (no dashes)
PAT18	Date of Birth Date patient was born Format: CCYYMMDD	ASAP 3.0 : Email Address (Not Used) ASAP 4.0+: Patient DOB Retrieved via the Kernel API $$DEM^VADPT (DBIA #10061) return variable VADM(3) **Example**: 19661112
PAT19	Gender Code Code indicating the sex of the patient if required by the PMP F Female M Male U Unknown	ASAP 3.0 : Patient DOB Retrieved via the Kernel API $$DEM^VADPT (DBIA #10061) return variable VADM(3) **Example**: 19661112 ASAP 4.0+: Patient Gender Code Retrieved via the Kernel API $$DEM^VADPT (DBIA #10061) return variable VADM(5). If no value is found ,reports **U** Example: F
PAT20	Species Code Used if required by the PMP to differentiate a prescription for an individual from one prescribed for an animal 01 Human 02 Veterinary Patient	ASAP 3.0 : Patient Gender Code Retrieved via the Kernel API $$DEM^VADPT (DBIA #10061) return variable VADM(5). If no value is found ,reports **U** ASAP 4.0+: Species Code Always **01** (Human)

Data Element	Name Description	Data Source
PAT21	Patient Location Code Code indicating where the patient is located when receiving pharmacy services if required by the PMP 01 Home 02 Intermediary Care 03 Nursing Home 04 Long-Term/Extended Care 05 Rest Home 06 Boarding Home 07 Skilled-Care Facility 08 Sub-Acute Care Facility 09 Acute-Care Facility 10 Outpatient 11 Hospice 98 Unknown 99 Other	Always **10** (Outpatient)
PAT22	Country of Non-U.S. Resident Used when the patient's address is a foreign country and PAT12 through PAT16 are left blank. This is a free-form text field	ASAP 3.0 : Primary Prescription Coverage Type (Not Used) ASAP 4.0+:Country of Non-U.S. Resident Retrieved via the Registration API $$ADD^VADPT (DBIA #10061) return variable VAPA(25) Example: MX
PAT23-PAT40	Not Used	
DSP–Dispensing Record		
DSP01	Reporting Status DSP01 requires one of the codes below. An empty or blank field no longer indicates a new prescription dispensing transaction. Individual PMPs may elect to require a subset of the codes below, specifically 00 and 02, but not 01. 00 New Record (indicates a new prescription dispensing transaction) 01 Revise (indicates that one or more data element values in a previously submitted transaction will be revised) 02 Void (message to the PMP to remove the original prescription transaction from its database, to mark the record as invalid, or to be ignored)	ASAP 4.0 • (Blank) New Record • 01 Revise Record • 02 Void Record • ASAP 4.1 and 4.2 • 00 New Record • 01 Revise Record • 02 Void Record
DSP02	Prescription Number Serial number assigned to the prescription by the pharmacy	**File**: PRESCRIPTION (#52) **Field**: RX # (#.01) **Example**: 10930393

Data Element	Name Description	Data Source
DSP03	Date Written Date the prescription was written (authorized) Format: CCYYMMDD	**File**: PRESCRIPTION (#52) **Field**: ISSUE DATE (#1) **Example**: 20130117
DSP04	Refills Authorized Number of refills authorized by the prescriber	**File**: PRESCRIPTION (#52) **Field**: # OF REFILLS (#9) Example: 5
DSP05	Date Filled Date prescription was filled Format: CCYYMMDD	• Original Fill **File**: PRESCRIPTION (#52) **Field**: RELEASED DATE/TIME (#31) • Refill **Sub-File**: REFILL (#52.1) **Field**: RELEASED DATE/TIME (#17) • Partial **Sub-File**: PARTIAL (#52.2) **Field**: RELEASED DATE/TIME (#8) **Example**: 20130118
DSP06	Refill Number Number of the fill of the prescription 0 indicates original dispensing 01-99 is the refill number	• Original 0 • Refill Refill # (e.g., 1, 2, …) • Partial 0
DSP07	Product ID Qualifier Used to identify the type of product ID contained in DSP08 01 NDC 02 UPC 03 HRI 04 UPN 05 DIN 06 Compound (used to indicate it is a compound' if used, the CDI segment then becomes a required segment)	Always **01** (NDC)

Data Element	Name Description	Data Source
DSP08	Product ID Full product identification as indicated in DSP07, including leading zeros without punctuation If the product is a compound, use 99999 for the first five characters of the product code. The remaining characters are assigned by the pharmacy. The CDI then becomes a required segment.	• Original Fill **File**: PRESCRIPTION (#52) **Field**: NDC (#27) • Refill **Sub-File**: REFILL (#52.1) **Field**: NDC (#11) • Partial **File**: PRESCRIPTION (#52) **Field**: NDC (#27) **Example**: 55555444422 (no dashes)
DSP09	Quantity Dispensed Number of metric units dispensed in metric decimal format Example: 2.5 **Note:** For compounds, show the first quantity in CDI04.	• Original Fill **File**: PRESCRIPTION (#52) **Field**: QTY (#7) • Refill **Sub-File**: REFILL (#52.1) **Field**: QTY (#1) • Partial **Sub-File**: PARTIAL (#52.2) **Field**: QTY (#.04) **Example**: 55555444422 (no dashes)
DSP10	Days Supply Estimated number of days the medication will cover	• Original Fill **File**: PRESCRIPTION (#52) **Field**: DAYS SUPPLY (#8) • Refill **Sub-File**: REFILL (#52.1) **Field**: DAYS SUPPLY (#1.1) • Partial **Sub-File**: PARTIAL (#52.2) **Field**: QTY (#.041) Example: 90
DSP11	Drug Dosage Units Code Identifies the unit of measure for the quantity dispensed in DSP09, if required by the PMP 01 Each (used to report solid dosage units or indivisible package) 02 Milliliters (ml) (for liters adjust to the decimal milliliter equivalent) 03 Grams (gm) (for milligrams adjust to the decimal gram equivalent)	**File**: DRUG (#50) **Field**: NCPDP DISPENSE UNIT (#82) • 01 EA • 02 ML • 03 GM • (Blank) Other

Data Element	Name Description	Data Source
DSP12	Transmission Form of Rx Origin Code Code indicating how the pharmacy received the prescription, if required by the PMP 01 Written Prescription 02 Telephone Prescription 03 Telephone Emergency Prescription 04 Fax Prescription 05 Electronic Prescription 99 Other	The CPRS API $$NATURE^ORUTL3 (IA# 5890) provides the Nature of Order, which is translated the following way: • 01 W • 02 V or T • 05 E • 99 Other
DSP13	Partial Fill Indicator Used when the quantity in DSP09 is less than the met quantity per dispensing authorized by the prescriber. This dispensing activity is often referred to as a split filling. 00 Not a Partial Fill 01 First Partial Fill **Note:** For additional fills per prescription, increment by 1. The second partial fill is reported as 02, up to a maximum of 99.	ASAP 4.0 and 4.1 • 01 Partial Fill • 02 Non-Partial Fill ASAP 4.2 and above • 00 Non-Partial Fill • 01 Partial 1 • 02 Partial 2 • 03 Partial 3
DSP14	Pharmacist National Provider Identifier (NPI) Identifier assigned to the pharmacist by CMS if the pharmacist applies for a number This number can be used to identify the pharmacist dispensing the medication	Retrieved via the Kernel API $$NPI^XUSNPI (DBIA # 4532) using the prescription fill pharmacist. **Example**: 1043278211
DSP15	Pharmacist State License Number This data element can be used to identify the pharmacist dispensing the medication Assigned to the pharmacist by the State Licensing Board	Not Used
DSP16	Classification Code for Payment Type Code identifying the type of payment, i.e. how it was paid for, if required by the PMP 01 Private Pay (Cash, Charge, Credit Card) 02 Medicaid 03 Medicare 04 Commercial Insurance 05 Military Installations and VA 06 Workers' Compensation 07 Indian Nations 99 Other	Always **05** (Military Installations and VA)

Data Element	Name Description	Data Source
DSP17	Date Sold Usage of this field depends on the pharmacy having a point-of-sale system that is integrated with the pharmacy management system to allow a bidirectional flow of information, and the PMP requires the capturing of the date received by the patient or the patient's agent This date may be different from DSP05	Not Used
DSP18	RxNorm Product Qualifier 01 Semantic Clinical Drug (SCD) 02 Semantic Branded Drug (SBD) 03 Generic Package (GPCK) 04 Branded Package (BPCK) **Note:** DSP18 and DSP19 are placeholder fields pending RxNorm becoming an industry standard and should not be required until such time.	Not Used
DSP19	RxNorm Code Used for electronic prescriptions to capture the prescribed drug product identification, if required by the PMP. **Note:** DSP18 and DSP19 are placeholder fields pending RxNorm becoming an industry standard and should not be required until such time.	Not Used
DSP20	Electronic Prescription Reference Number Used to provide an audit trail for electronic prescriptions, if required by the PMP **Note:** DSP20 and DSP21 should be reported as a pair to the prescription drug monitoring program, and each program decides which one, if not both, it decides to capture.	Not Used
DSP21	Electronic Prescription Order Number **Note:** DSP20 and DSP21 should be reported as a pair to the prescription drug monitoring program, and each program decides which one, if not both, it decides to capture.	Not Used
RX – RX Prescription Order (ASAP 3.0 only)		
RX01	Reporting Status 00 Add 01 Change 02 Delete	Not Used
RX02	**Program Participation Status** Code to reflect the current status of the prescription in relation to program participation (i.e. refill reminder or education enrollment). 01 Rx is active and participation is current 02 Rx order has been discontinued by prescriber 03 Patient has refused participation for this Rx	Not Used

Data Element	Name Description	Data Source
	04 Patient has requested disenrollment for this Rx	
RX03	Prescription Number Serial number assigned to the prescription by the pharmacy	**File**: PRESCRIPTION (#52) **Field**: RX # (#.01) **Example**: 10930393
RX04-RX07	Not Used	
RX08	Date Rx Written Date the prescription was written (authorized) Format: CCYYMMDD	**File**: PRESCRIPTION (#52) **Field**: ISSUE DATE (#1) **Example**: 20130117
RX09-RX012	Not Used	
RX13	Product ID Qualifier Used to identify the type of product ID contained in DSP08 01 NDC 02 UPC 03 HRI 04 UPN	Always **01** (NDC)
RX14	Product ID Full product identification as indicated in RX13, including leading zeros without punctuation	• Original Fill **File**: PRESCRIPTION (#52) **Field**: NDC (#27) • Refill **Sub-File**: REFILL (#52.1) **Field**: NDC (#11) • Partial **File**: PRESCRIPTION (#52) **Field**: NDC (#27) **Example**: 55555444422 (no dashes)
RX15-RX16	Not Used	
RX17	Quantity Prescribed Number of metric units dispensed in metric decimal format. Example: 2.5	• Original Fill **File**: PRESCRIPTION (#52) **Field**: QTY (#7) • Refill **Sub-File**: REFILL (#52.1) **Field**: QTY (#1) • Partial **Sub-File**: PARTIAL (#52.2) **Field**: QTY (#.04) **Example**: 55555444422 (no dashes)

Data Element	Name Description	Data Source
RX18	Days Supply Estimated number of days the medication will cover	• Original Fill **File**: PRESCRIPTION (#52) **Field**: DAYS SUPPLY (#8) • Refill **Sub-File**: REFILL (#52.1) **Field**: DAYS SUPPLY (#1.1) • Partial **Sub-File**: PARTIAL (#52.2) **Field**: QTY (#.041) Example: 90
RX19	Not Used	
RX20	Number Of Refills Authorized Number of refills authorized by the prescriber	**File**: PRESCRIPTION (#52) **Field**: # OF REFILLS (#9) Example: 5
RX21-RX29	Not Used	
PRE – Prescriber Information		
PRE01	National Provider Identifier (NPI) Identifier assigned to the prescriber by CMS	ASAP 3.0 : Not Used ASAP 4.0+: Prescriber National Provider Identifier (NPI) Retrieved via the Kernel API $$NPI^XUSNPI (DBIA # 4532) using the prescription fill provider **Example**: 1043278211
PRE02	DEA Number Identifying number assigned to a prescriber or an institution by the Drug Enforcement Administration (DEA)	ASAP 3.0 : Not Used ASAP 4.0+: Prescriber DEA Number First "-" (dash) piece of the value returned by the Kernel API $$DEA^XUSER (DBIA # 2343) using the prescription fill provider **Example**: AV4598251
PRE03	DEA Number Suffix Identifying number assigned to a prescriber by an institution when the institution's number is used as the DEA number, if required by the PMP	ASAP 3.0 : Prescriber NPI ASAP 4.0+: Prescriber DEA Number Suffix Second "-" (dash) piece of the value returned by the Kernel API $$DEA^XUSER (DBIA # 2343) using the prescription fill provider **Example**: 4598251PP
PRE04	Prescriber State License Number Identification assigned to the Prescriber by the State Licensing Board Used if required by the PMP	ASAP 3.0 : Prescriber DEA Number ASAP 4.0+: Prescriber State License Number (Not Used)
PRE05	Last Name Prescriber's last name	ASAP 3.0 : Prescriber DEA Number Suffix ASAP 4.0+: Prescriber Last Name

Data Element	Name Description	Data Source
	Used if required by the PMP	**File**: NEW PERSON (#200) **Field**: NAME (#.01) First value before the comma (e.g., **SMITH**, JOHN F) **Example**: SMITH
PRE06	First Name Prescriber's first name Used if required by the PMP	ASAP 3.0 : Prescriber State License Number (Not Used) ASAP 4.0+: Prescriber First Name **File**: NEW PERSON (#200) **Field**: NAME (#.01) First value after the comma and before blank space (e.g., SMITH, **JOHN** F) Example: JOHN
PRE07	Middle Name Prescriber's middle name or initial Used if required by the PMP and is available in the pharmacy system	ASAP 3.0 : Prescriber Alternate ID (Not Used) ASAP 4.0+: Prescriber Middle Name **File**: NEW PERSON (#200) **Field**: NAME (#.01) First value after the comma and after the first blank space (e.g., SMITH, JOHN **F**) Example: F
PRE08	Phone Number Prescriber's phone number	ASAP 3.0 : Prescriber's Last Name ASAP 4.0 & 4.1: N/A (up to PRE07 only) ASAP 4.2: Prescriber's Phone Number **File**: NEW PERSON (#200) **Field**: PHONE NUMBER # (#.132) **Example**: 5559998888 (no dashes)
PRE09	Prescriber' First Name Prescriber's first name	ASAP 3.0 Only **File**: NEW PERSON (#200) **Field**: NAME (#.01) First value after the comma and before blank space (e.g., SMITH, **JOHN** F) Example: JOHN
PRE10	Prescriber' Middle Name Prescriber's middle name	ASAP 3.0 Only **File**: NEW PERSON (#200) **Field**: NAME (#.01) First value after the comma and after the first blank space (e.g., SMITH, JOHN **F**) Example: F
PRE11-PRE20	Not Used	
RPH – Pharmacist Information (ASAP 3.0 only)		
RPH01-	Not Used	

Data Element	Name Description	Data Source
RPH02		
RPH03	National Provider Identification (NPI) Identifier assigned to the pharmacist by CMS if the pharmacist applies for a number. This number is used to identify the pharmacist who dispensed the medication.	Retrieved via the Kernel API $$NPI^XUSNPI (DBIA # 4532) using the prescription fill pharmacist. **Example**: 1043278211
RPH04-RPH05	Not Used	
RPH06	Last Name Pharmacist's last name	**File**: NEW PERSON (#200) **Field**: NAME (#.01) First value before the comma (e.g., **SMITH**, JOHN F) **Example**: SMITH
RPH07	First Name Pharmacist's first name	**File**: NEW PERSON (#200) **Field**: NAME (#.01) First value after the comma and before blank space (e.g., SMITH, **JOHN** F) Example: JOHN
RPH08	Middle Name Pharmacist's middle name or initial	**File**: NEW PERSON (#200) **Field**: NAME (#.01) First value after the comma and after the first blank space (e.g., SMITH, JOHN **F**) Example: F
RPH09-RPH11	Not Used	
CDI – Compound Drug Ingredient Detail (Not Used)		
CSR – Controlled Substance Reporting (ASAP 3.0 only – Not Used)		
AIR – Additional Information Reporting (Not Used)		
PLN – Third-Party Plan (ASAP 3.0 Only – Not Used)		
TP–Pharmacy Trailer		
TP01	Detail Segment Count Number of detail segments included for the pharmacy, including the Pharmacy Header (PHA) including the Pharmacy Trailer (TP) segments	Calculated for each transmission
TT–Transaction Trailer		
TT01	Transaction Control Number Identifying control number that must be unique Assigned by the originator of the transaction Must match the number in TH02	Same as TH02
TT02	Segment Count	Calculated for each transmission

Data Element	Name Description	Data Source
	Total number of segments included in the transaction including the header and trailer segments	

(This page included for two-sided copying.)

Appendix F:
OneVA Pharmacy HL7 Messaging using middleware application for External System

OneVA Pharmacy General Information

The overall OneVA Pharmacy design has several components. They are:

- Veterans Health Information Systems and Technology Architecture (VistA) (Patch PSO*7.0*454)
- Health Level 7 (HL7) Messaging
- A middleware application
- Health Data Repository/Clinical Data Service (HDR/CDS) Repository
- Patch PSO*7*497, which fixes the following OneVA Pharmacy critical defects:
    1. To fix the auto-suspend defect.
    2. To limit refill permissions to only those personnel who have the correct key(s).
    3. "Trade Name" prevented from being refilled/partial filled by a remote OneVA pharmacy location so that dispensing errors are reduced on prescriptions due to the lack of information.
    4. To identify titration prescriptions at the host site and to disallow refills of such titration prescriptions at the dispensing site.
    5. Update OneVA Pharmacy functionality to add menu item for turning OFF/ON Switch for OneVA Pharmacy ADPACs

VistA is the user interface where a pharmacist uses the “Patient Prescription Processing [PSO LM BACKDOOR ORDERS]” menu (found within the VistA Pharmacy Outpatient Pharmacy Manager package) to query for and refill patient’s active and refillable prescriptions from other VA Pharmacy VistA instances. The OneVA Pharmacy VistA patch, PSO*7.0*454, uses Health Level 7 (HL7) messaging to query and receive remote prescription details to and from the Health Data Repository/Clinical Data Services (HDR/CDS) Oracle Repository.

The VistA instance the Veteran is refilling the prescription is considered the ‘dispensing’ VistA instance. This patch allows a Pharmacist from a ‘dispensing’ VistA instance to refill a prescription that originated from another VA Pharmacy VistA instance and print a prescription label at the dispensing site. The VA Pharmacy VistA instance where the prescription originated and currently exits is the ‘host’ VistA instance. The host VistA instance is where the update to the prescription record is made after the fill is processed and the host label file is being extracted to return to the dispensing site via HL7.

The OneVA Pharmacy patch sends the HL7 query message through a middleware application. The middleware application executes a Web Service call to query the HDR/CDS Repository for specific medication information from all VA Pharmacy’s VistA sites. The middleware’ s configuration contains filtering processes that applies specific business rules against the HDR/CDS Web Service call to return

the appropriate prescriptions to the dispensing VistA. VistA and middleware communicate using HL7 v2.5.1 over Minimal Layer Protocol (MLLP). Communication to the HDR/CDS Repository is done via Simple Object Access Protocol (SOAP) Web Services.

The medications return to the dispensing site via HL7 messaging. Once the prescription reaches the dispensing site, they display below any 'local' prescriptions on the 'Medication Profile' screen. The prescriptions displayed to the Pharmacist by VA Pharmacy site. The dispensing Pharmacist can then view the 'remote' prescriptions and select one to refill or partially fill.

For label printing, VistA triggers the HL7 message stream that executes during the full or partial refill prescription processes. The event triggers the handling of the printing of the host label information at the dispensing printing device.

OneVA Pharmacy New Menu

A new option has been created to allow reporting regarding what 'remote' prescriptions have been filled by a particular facility, and what facilities have refilled prescriptions that belong to a target facility. This menu is OneVA Pharmacy Prescription Report [PSO REMOTE RX REPORT].

OneVA Pharmacy New Logical Link

A new HL7 logical link, PSORRXSEND will facilitate the sending of the HL7 messages to middleware. The PSO VISTA PHARM and PSO EMI PHARM application parameters will control the message processing within VistA. The existing multi-threaded listener will be leveraged at each facility for receiving the HL7 messages into VistA.

OneVA Pharmacy New Flag

*****Important*****

DO NOT turn on the OneVA Pharmacy Flag until directed to do so. The software will be released, deployed, and installed with the activation flag set to the "off" position. The Existing Product Intake Program (EPIP) Implementation Team will coordinate with the sites Pharmacy Automatic Data Processing Application Coordinator (ADPAC) on the specific date in which to activate the software.

To use OneVA Pharmacy, the user turns on the 'ONEVA PHARMACY FLAG (#101)'. The 'ONEVA PHARMACY FLAG (#101)' is located on the 'PHARMACY SYSTEM FILE (#59.7)' This field will allow sites to toggle the OneVA Pharmacy logic 'on' or 'off' depending on current needs. The user changes the field by using option, PSS SYS EDIT and editing the 'ONEVA PHARMACY FLAG (#101)' field.

The patch PSS*1*212 delivers the 'ONEVA PHARMACY FLAG (#101)' in the 'off' state. When this flag is in the 'off' state, the HDR/CDS Repository is not queried for external prescriptions and other VistA instances will not be able to refill prescriptions that belong to the VistA instance with the flag set to the

'off' state. When in the 'on' state, all prescription queries and actions may be taken for remote queries, refills, and partial fills. In order to process prescriptions from another VistA instance, that instance will also need to have its ‘ONEVA PHARMACY FLAG (#101)’ set to the 'on' state.

To turn on the ‘ONEVA PHARMACY FLAG (#101)’

Select OPTION NAME: PSS SYS EDIT Pharmacy System Parameters Edit
Pharmacy System Parameters Edit

PMIS PRINTER: PP8//
PMIS LANGUAGE: English//
WARNING LABEL SOURCE: NEW//
CMOP WARNING LABEL SOURCE: NEW//
OPAI WARNING LABEL SOURCE: NEW//
AUTOMATE CPRS REFILL:
ONEVA PHARMACY FLAG: ON//

OneVA Pharmacy Modified Protocols

Patch PSO*7*497 modifies the following protocols to the PROTOCOL file (#101) to remediate critical defects found in PSO*7*454. They are:

1. PSO LM REFILL REMOTE ORDER (Modified)
2. PSO LM REMOTE ORDER MENU (Modified)
3. PSO LM REMOTE PARTIAL (Modified)

OneVA Pharmacy New Protocols

Patch PSO*7*454 adds new protocols to the PROTOCOL file (#101) to facilitate the OneVA Pharmacy messaging. They are:

1. PSO LM MEDICATION PROFILE (Modified)
2. PSO LM REFILL REMOTE ORDER (New)
3. PSO LM REMOTE ORDER MENU (New)
4. PSO LM REMOTE ORDER SELECTION (New)
5. PSO LM REMOTE PARTIAL (New)
6. PSO LM REMOTE REPORT DETAILS (New)
7. PSO LM REMOTE RX REPORT (New)
8. PSO LM REMOTE RX REPORT MENU (New)
9. PSO LM SELECT REPORT ITEM (New)
10. PSO REMOTE RX QBP Q13 ESUBS (New)
11. PSO REMOTE RX QBP Q13 EVENT (New)
12. PSO REMOTE RX RDS O13 ESUBS (New)

13. PSO REMOTE RX RDS O13 EVENT (New)

OneVA Pharmacy New Application Parameters

Patch PSO*7*454 adds two new HL7 application parameters to the HL7 APPLICATION PARAMETER file (#771). They are:

PSO EMI PHARM

PSO VISTA PHARM

New Fields on Existing Files

Patch PSO*7*454 adds new fields to the PRESCRIPTION (#52) REFILL file (#52.1). They are:

REMOTE FILL SITE (#52.1,91)

REMOTE PHARMACMIST (#52.1,92)

REMOTE PHARMACIST PHONE (#52.1,93)

Patch PSO*7*454 adds new fields to the PRESCRIPTION (#52) PARTIAL DATE file (#52.2). They are:

REMOTE FILL SITE (#52.2,91)

REMOTE PHARMACMIST (#52.2,92)

REMOTE PHARMACIST PHONE (#52.2,93)

Patch PSO*7*454 adds the new ONEVA PHARMACY FLAG field (#3001) to the OUTPATIENT SITE (#59) file).

OneVA Pharmacy New File

The Remote Prescription Log File (#52.09) logs all activity related to OneVA Pharmacy ‘remote refills’ and ‘partial fills’. The log file will record all actions taken by the local or dispensing site as well as all actions taken by any external facility for any remote or host prescription. The log is input into the OneVA Pharmacy reports found on the OneVA Pharmacy Prescription Report [PSO REMOTE RX REPORT] menu.

REMOTE PRESCRIPTION LOG file (#52.09)

PATIENT (.02)

RX NUMBER (.03)

SITE NUMBER (.04)

REQUEST TYPE (.05)

OUTGOING REQUEST PHARMACIST (.06)

REMOTE FILLING PHARMACIST (.061)

QUANTITY (.07)

DAYS SUPPLY (.08)

REFILL/PARTIAL DATE (.09)

DISPENSED DATE (.1)

REMOTE DRUG NAME (1)

LOCAL (MATCHED) DRUG (1.1)

TOTAL REFILL/PARTIAL FILL COST (1.2

VA PRODUCT ID (1.3)

MESSAGE DETAILS (2)

LABEL DATA (3)

OneVA Pharmacy Component Diagram

Version 2.5.1 of the HL7 specification will be used for the message format. The SOAP message versions are directed by the HDR/CDSs endpoint requirements. The following image shows the dispensing VistA instance query to the HDR/CDS Repository and the message communication flow from the dispensing VistA instance to one or more host VistA systems.

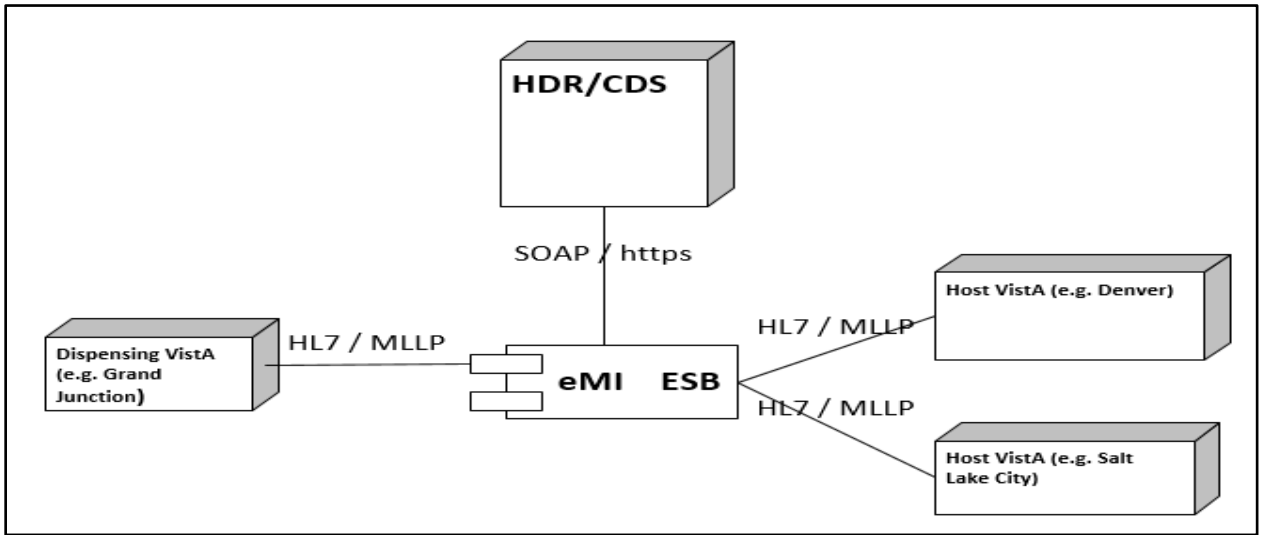

Figure 1: Dispensing VistA Instance to HDR/CDS Repository

The following figure provides the business capability the components are processing specifically for the OneVA Pharmacy Patch.

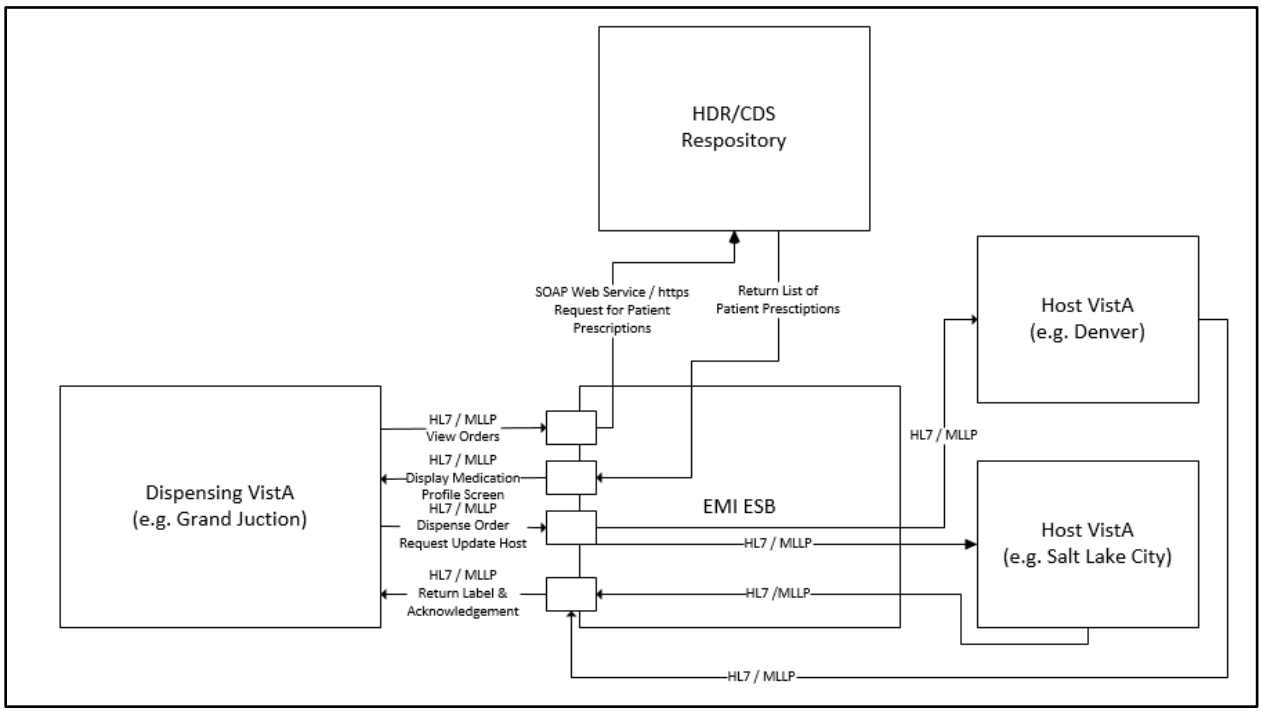

Figure 2: Business Capability Processed for OneVA Pharmacy Patch

When the Pharmacist enters a request to display the Medication Profile screen from a dispensing VistA instance, the QBP^Q13 HL7 'Query By Parameter Request' message is sent to a middleware application. A middleware application will harvest the necessary information to send a SOAP request to the HDR/CDS Repository for the patient's prescriptions. The SOAP response is transformed into a RTB^K13 HL7 'Prescription Query Service Response' message that contains the patient's prescription data. The patient's prescription data is returned to the dispensing VistA instance and displayed on the Medication Profile screen. The following image displays the sequence of events and message types for this processing.

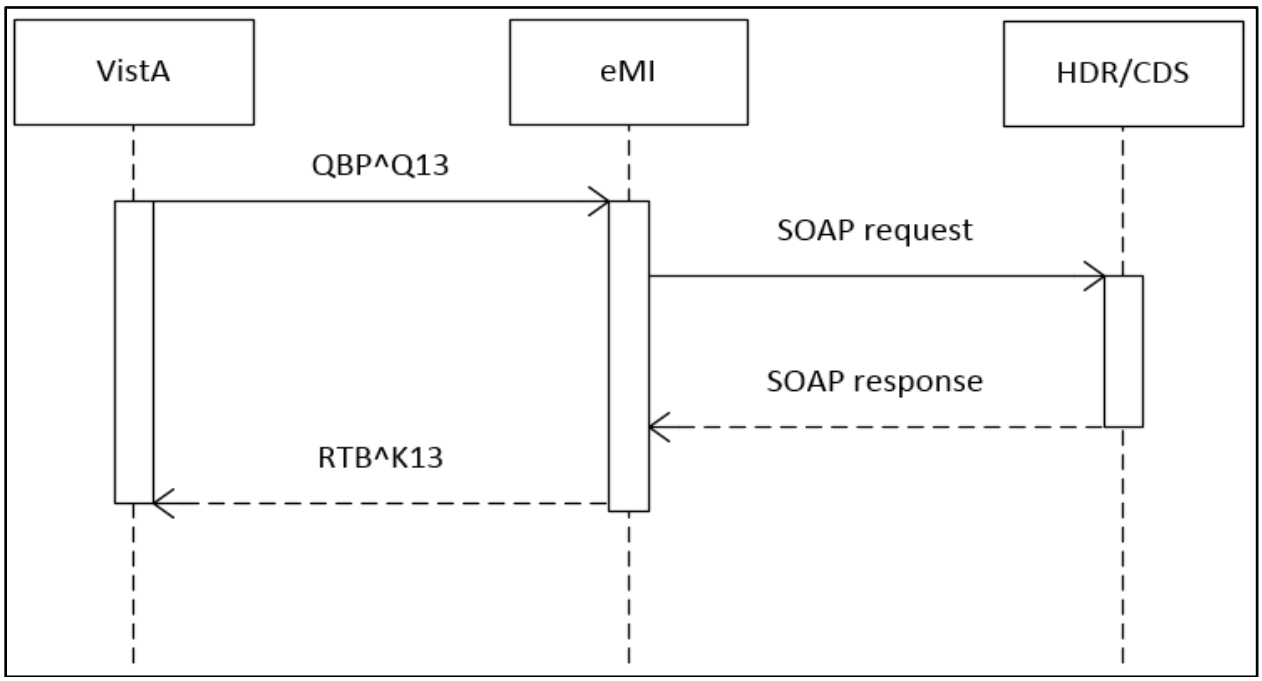

Figure 3: Processing Sequence of Events and Message Type

When a Pharmacist selects a prescription from the Medication Profile screen from a dispensing VistA instance, the RDS^O13 HL7 'Pharmacy/Treatment Dispense' message is sent to a middleware application will receive the request, determine the destination facility, and then forward the message to the host VistA instance. The host VistA instance will process the message and return a response message containing the prescription label. The middleware will route the message back to the dispensing VistA, displaying the completion of the transaction to the Pharmacist on the screen. The following image displays the sequence of events and message types for the Dispense Order from Another VA Pharmacy Location functionality.

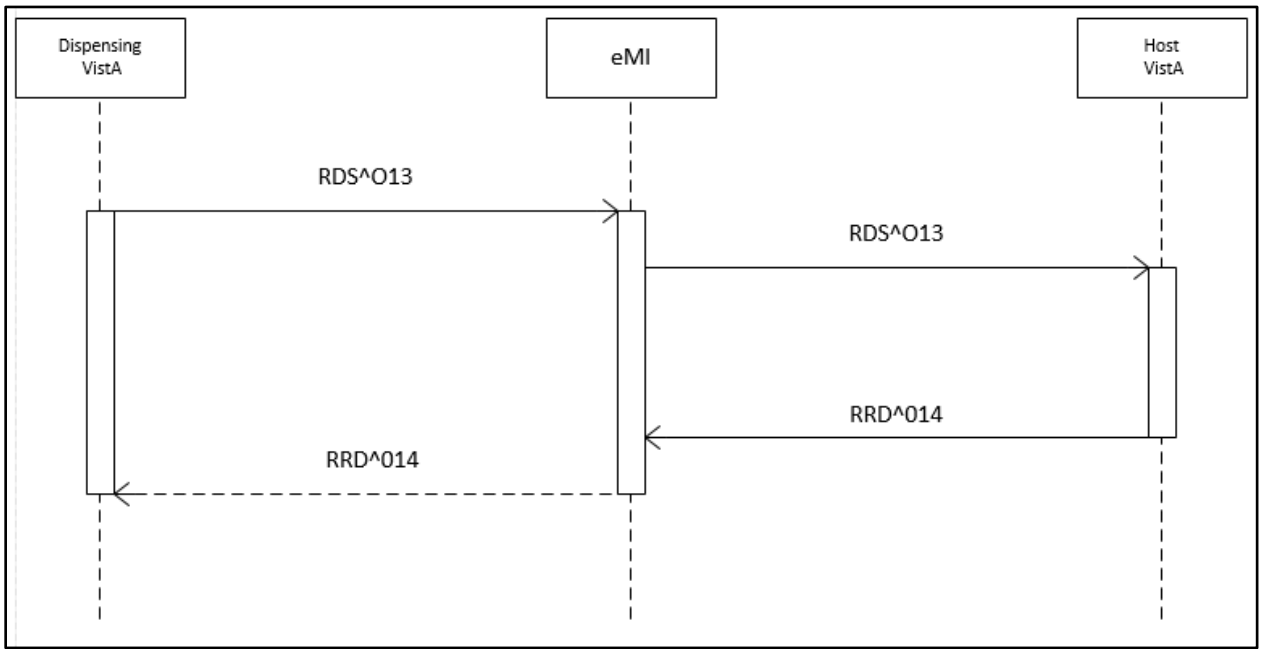

Figure 4: Dispense Order from another VA Pharmacy Location Functionality

OneVA Pharmacy HL7 Message Types

There are four HL7 message types created within the OneVA Pharmacy software. They are:

1. QBP^Q13 Query by Parameter Request
2. RTB^K13 Prescription Query Service Request
3. RDS^O13 Pharmacy/Treatment Dispense Message Request
4. RRD^O14 Prescription Refill/Partial Service Response

QBP^Q13 Query by Parameter Request

The following table defines the data elements required for each of the following segments of the QBP^Q13 Query by Parameter Request.

Message Header (MSH) segment

Query Parameter Definition (QPD) segment

Patient Identification (PID) segment

Note: The MUMPS code is designed to use the 'D BLDPID^PSOTPHL2(DFN,"",.PSORRDAT,.HL,.ERR)' routine to create the Patient Identification (PID) segment.

Response Control Parameter (RCP) segment

Segment	Piece	Description/Field Name	Data Type
MSH	1	Field Separator	ST
	2	Encoding Characters	ST
	3	Sending Application	HD
	4	Sending Facility	HD
	5	Receiving Application	HD
	6	Receiving Facility	HD
	7	Date/Time of Message	TS
	8	Security	ST
	9	Message Type	CM
	10	Message Control ID	ST
	11	Processing ID	PT
	12	Version ID	ID
	13	Sequence Number	NM
	14	Continuation Pointer	ST
	15	Accept Acknowledgement	ID
	16	Application Acknowledgement	ID
	17	Country Code	ID
	18	Character Set	ID
	19	Principal Language of Messages	CE
QDP	1	Message Type	ST
	2	Message Query Name	CE
	3	Query Tag	ST
	4	User Parameters	Optional
PID	1	Set ID – Patient ID	SI
	2	Patient ID (External ID)	CK

Segment	Piece	Description/Field Name	Data Type
	3	Patient ID (Internal ID)	CK
	4	Alternate Patient ID	CK
	5	Patient Name	PN
	6	Mother's Maiden Name	ST
	7	Date of Birth	TS
	8	Sex	ID
	9	Patient Alias	PN
	10	Race	ID
	11	Patient Address	AD
	12	County Code	ID
	13	Phone Number – Home	TN
	14	Phone Number – Business	TN
	15	Language – Patient	ST
	16	Marital Status	ID
	17	Religion	ID
	18	Patient Account Number	CK
	19	SSN Number – Patient	ST
	20	Driver's Lic Num – Patient	CM
	21	Mother's Identifier	CK
	22	Ethnic Group	ID
	23	Birth Place	ST
	24	Multiple Birth Indicator	ID
	25	Birth Order	NM
	26	Citizenship	ID
	27	Veterans Military Status	CE
RCP	1	Query Priority	ST
	N	Ignored	

RTB^K13 Prescription Query Service Reponses

Middleware will query the HDR/CDS Repository and apply the filter and transformation logic. The Middleware application will formulate the RTB^K13 HL7 message, which contains the prescription records for the selected patient.

The following table defines the data elements required for each of the following segments of the RTB^K13 Prescription Query Service Response.

Message Header (MSH) segment

Message Acknowledgement (MSH) segment

Query Acknowledgement (QAK) segment

Query Parameter Definition (QPD) segment

Table Row Definition (RDF) segment

Segment	Piece	Description/Field Name	Data Type/Description
MSH	1	Field Separator	ST
	2	Encoding Characters	ST
	3	Sending Application	HD
	4	Sending Facility	HD
	5	Receiving Application	HD
	6	Receiving Facility	HD

Segment	Piece	Description/Field Name	Data Type/Description
	7	Date/Time of Message	TS
	8	Security	ST
	9	Message Type	CM
	10	Message Control ID	ST
	11	Processing ID	PT
	12	Version ID	ID
	13	Sequence Number	NM
	14	Continuation Pointer	ST
	15	Accept Acknowledgement	ID
	16	Application Acknowledgement	ID
appendi	17	Country Code	ID
	18	Character Set	ID
	19	Principal Language of Messages	CE
MSA	1	Acknowledge Code	ID
	2	Message Control ID	ST
	3	Text Message	W
	4	Expected Sequence Number	NM
	5	Delayed Acknowledgement Type	W
	6	Error Condition	W
	7	Message Waiting Number	NM
	8	Message Waiting Priority	ID
QAK	1	Query Tag	
	2	Query Response Status Code	
	3	Message Query Name	
	4	Count of RDT segments	
QDP	1	Message Query Name	CE
	2	Query Tag	ST
	3	User Parameters	
RDF	1	Site Number	Site Number of the facility where the veteran has or had a prescription
	2	Rx Number	The prescription number
	3	Drug Name (from the host site)	The name of the drug
	4	Quantity	The quantify of the prescription
	5	Refills	The number of refills remaining
	6	Days Supply	The number of days the prescription should be used
	7	Expiration Date	The expiration date of the prescription
	8	Issue Date	The issue date of the prescription
	9	Stop Date	The end date for the prescription (same as expiration date)
	10	Last Fill Date	The last date the prescription was refilled
	11	Sig	
	12	Detail	
	13	Status	The status of the prescription
	14	VA Product ID	The VA ID of the drug
	15	FQDN/Port	The fully qualified domain name of the host where the

Segment	Piece	Description/Field Name	Data Type/Description
			prescription originated and its port.
RDT	1	Site Number	Site Number of the facility where the veteran has or had a prescription
	2	Rx Number	The prescription number
	3	Drug Name (from the host site)	The name of the drug
	4	Quantity	The quantify of the prescription
	5	Refills	The number of refills remaining
	6	Days Supply	The number of days the prescription should be used
	7	Expiration Date	The expiration date of the prescription
	8	Issue Date	The issue date of the prescription
	9	Stop Date	The end date for the prescription (same as expiration date)
	10	Last Fill Date	The last date the prescription was refilled
	11	Sig	
	12	Detail	
	13	Status	The status of the prescription
	14	VA Product ID	The VA ID of the drug
	15	FQDN/Port	The fully qualified domain name of the host where the prescription originated and its port.

Example RTB^K13 Prescription Query Service Response

```
Message Type: RTB          Event Type: K13
MESSAGE HEADER:
MSH^~|\&^PSO EMI PHARM^200HD~HDR.XXX.XX.COM~DNS^PSO VISTA PHARM^983~DISPSHR.FO-
DISPENSINGSITE.XXX.XX.COM~DNS^20160825072810-0500^^RTB~K13^1^T^2.5.1
MESSAGE TEXT:
MSA^CA^98321356514
QAK^^OK^Q13~Active Prescriptions~HL70471^7
QPD^Q13~Active Prescriptions~HL70471
RDF^15^Site Number|Rx Number|Drug Name|Quantity|Refills|Days Supply|ExpONEtion D
ate|Issue Date|Stop Date|Last Fill Date|Sig|Detail|Status|VA Product ID|FQDN

RDT^552^2718401^CALCIUM GLUCONATE 500MG TAB ^30^3^D30^20170526^20160525^20170526
^20160714^TAKE ONE TABLET BY MOUTH DAILY^CALCIUM GLUCONATE TAKE 1 500MG TABLET B
Y MOUTH qd Qty: 20 MG^SUSPENDED^C0042^TEST.HOSTSITE552.XXX.XX.COM

RDT^552^2718398^ASPIRIN 325MG BUFFERED TAB^300^2^D90^20170316^20160315^20170316^
20160315^TAKE ONE TABLET BY MOUTH THREE TIMES A DAY AS NEEDED --AVOID ANTACIDS--
^ASPIRIN TAKE 1 325MG TABLET BY MOUTH tid prn Qty: 20 MG^DISCONTINUED^A0100^TEST
.HOSTSITE552.XXX.XX.COM

RDT^552^2718397^VERAPAMIL HCL 120MG TAB^60^5^D60^20170616^20160615^20170616^2016
0615^TAKE ONE TABLET BY MOUTH DAILY --TAKE WITH FOOD/AVOID GRAPEFRUIT JUICE--^VE
RAPAMIL TAKE 1 120MG TABLET BY MOUTH qd Qty: 20 MG^ACTIVE^V0006^TEST.HOSTSITE552.XXX.
XXX.COM

RDT^984^2718744^OMEPRAZOLE 10MG SA CAP^60^5^D60^20170504^20160503^20170504^20160
503^TAKE 1 CAPSULE BY MOUTH DAILY **DO NOT CRUSH OR CHEW**^OMEPRAZOLE TAKE 1 CAP
SULE BY MOUTH qd Qty: UNK^ACTIVE^^HOSTSHR.FO-HOSTSITE984.XXX.XX.COM

RDT^984^2718747^CETIRIZINE HCL 10MG TAB^45^4^D45^20170424^20160423^20170424^^TAK
E ONE TABLET BY MOUTH DAILY^CETIRIZINE TAKE 1 10MG TABLET BY MOUTH QD Qty: 20 MG
^HOLD^C0638^HOSTSHR.FO-HOSTSITE984.XXX.XX.COM

RDT^984^2718746^AMOXICILLIN 250MG CAP^30^0^D10^20160601^20150601^20160601^201605
04^TAKE 1 CAPSULE BY MOUTH THREE TIMES A DAY FOR 10 DAYS --TAKE WITH FOOD--^AMOX
ICILLIN TAKE 1 CAPSULE BY MOUTH tid Qty: UNK for 10D^EXPIRED^^HOSTSHR.FO-HOSTSITE984.XXX.XX.COM

RDT^552^2718400^ALBUTEROL 0.5% INHL SOLN^2^1^D14^20170610^20160609^20170610^^INH
ALE 2 ML IN NEBULIZER BY INHALATION TWICE A DAY^ALBUTEROL 0.5% INHALE 2 mL INHAL
ATION bid Qty: UNK^HOLD^^TEST.HOSSITE552.XXX.XX.COM
```

Example RTB^K13 HL7 RDF Segment

The Table Row Definition (RDF) segment defines the content for the Table Row Data (RDT) segment in the RTB^K13 HL7 message. The following is an example of the RDF segment created for the RTB^K13 HL7 message. The image displays the format to use for each prescription order.

```
RDF^15^Site Number|Rx Number|Drug Name|Quantity|Refills|Days Supply|ExpONEtion D
ate|Issue Date|Stop Date|Last Fill Date|Sig|Detail|Status|VA Product ID|FQDN
```

RDS^O13 Pharmacy/Treatment Dispense Message Request

The 'RDS^O13' is a pass through message that requires no transformation by a middleware application. The message can either be for a 'Refill' or 'Partial Fill' request. For a 'Partial Fill' request, the NTE segment will exist; it will not be there for a 'Refill' request.

The following table defines the data elements required for each of the following segments of the RTB^K13 Prescription Query Service Response.

Message Header (MSH) segment

Patient Identification (PID) segment

Note: The MUMPS code uses BLDPID^PSOTPHL2(DFN,"",.PSORRDAT,.HL,.ERR)' to create the Patient Identification (PID) segment.

Common Order (ORC) segment

Pharmacy/Treatment Prescription Order (RXO

Notes and Comments (NTE) segment

Notes: The Notes and Comments (NTE) segment will be present if the request is for a 'Partial Fill'.

Segment	Piece	Description/Field Name	Data Type
MSH	1	Field Separator	ST
	2	Encoding Characters	ST
	3	Sending Application	HD
	4	Sending Facility	HD
	5	Receiving Application	HD
	6	Receiving Facility	HD
	7	Date/Time of Message	TS
	8	Security	ST
	9	Message Type	CM
	10	Message Control ID	ST
	11	Processing ID	PT
	12	Version ID	ID
	13	Sequence Number	NM
	14	Continuation Pointer	ST
	15	Accept Acknowledgement	ID
	16	Application Acknowledgement	ID
	17	Country Code	ID
	18	Character Set	ID
	19	Principal Language of Messages	CE
PID	1	Set ID – Patient ID	SI
	2	Patient ID (External ID)	CK
	3	Patient ID (Internal ID)	CK
	4	Alternate Patient ID	CK
	5	Patient Name	PN

Segment	Piece	Description/Field Name	Data Type
	6	Mother's Maiden Name	ST
	7	Date of Birth	TS
	8	Sex	ID
	9	Patient Alias	PN
	10	Race	ID
	11	Patient Address	AD
	12	County Code	ID
	13	Phone Number – Home	TN
	14	Phone Number – Business	TN
	15	Language – Patient	ST
	16	Marital Status	ID
	17	Religion	ID
	18	Patient Account Number	CK
	19	SSN Number – Patient	ST
	20	Driver's Lic Num – Patient	CM
	21	Mother's Identifier	CK
	22	Ethnic Group	ID
	23	Birth Place	ST
	24	Multiple Birth Indicator	ID
	25	Birth Order	NM
	26	Citizenship	ID
	27	Veterans Military Status	CE
ORC	1	Order Control	ID
	2	Placer Order Number	CM
	3	Filler Order Number	CM
	4	Placer Group Number	CM
	5	Order Status	ID
	6	Response Flag	ID
	7	Quantity/Timing	TQ
	8	Parent	CM
	9	Date/Time of Transaction	TS
	10	Entered By	CN
	11	Verified By	CN
	12	Ordering Provider	CN
	13	Enterer's Location	CM
	14	Call Back Phone Number	TN
	15	Order Effective Date/Time	TS
	16	Order Control Code Reason	CE
	17	Entering Organization	CE
	18	Entering Device	CE
	19	Action By	CN
RXO	1	Requested Give Code	CE
	2	Requested Give Amount – Minimum	NM
	3	Requested Give Amount – Maximum	NM
	4	Requested Give Units	CE
	5	Requested Dosage Form	CE
	6	Provider's Pharmacy Instructions	CE
	7	Provider's Administration Instructions	CE
	8	Deliver to Location	CM
	9	Allow Substitutions	ID
	10	Requested Dispense Code	CE
	11	Requested Dispense Amount	NM
	12	Requested Dispense Units	CE
	13	Number of Refills	NM

Segment	Piece	Description/Field Name	Data Type
	14	Ordering Provider's DEA Number	CN
	15	Pharmacist Verifier ID	CN
	16	Needs Human Review	ID
	17	Requested Giver Per (Time Unit)	ST
NTE	1	Set ID – NTE	SI
	2	Source of Comment	ID
	3	Comment	FT
	4	Comment Type	CE

Example RDS^O13 Pharmacy/Treatment Dispense Message Request Refill

```
Message Type: RDS          Event Type: O13
MESSAGE HEADER:
MSH^~|\&^PSO VISTA PHARM^983~DISPSHR.FO-DISPENSINGSITE.XXX.XX.COM~DNS^PSO EMI PHARM^984
~HOSTSHR.FO-HOSTSITE.XXX.XX.COM~DNS^20160825082857-0500^^RDS~O13^98321356516^T^2
.5.1^^^^^USA
MESSAGE TEXT:
PID^^^1012874629V320036~~~USVHA&&HL70363~NI~VA FACILITY ID&983&L|666019258~~~USS
SA&&HL70363~SS~VA FACILITY ID&983&L|7214233~~~USVHA&&HL70363~PI~VA FACILITY ID&9
83&L^^PSOPATIENT~ONE~OOO~~~~L^INGLE~~~~~~M^19480925^M^^^1624 N Park Ave~"""~INDIANAP
OLIS~IN~46202-2702~~P~""|~~INDIANAPOLIS~IN~~~N^097^(317)555-5678^(463)555-2256^^
""^""^^666019258^^^^INDIANAPOLIS IN^^^^^^""^^
ORC^RF^2718907~984~HOSTSHR.FO-HOSTSITE.XXX.XX.COM^^^^^^^3160825^520647065~COUPLA
ND~KATHLEEN~M^^^~~~983^
RXO^^^^^^^^W~~~983
```

Example RDS^O13 Pharmacy/Treatment Dispense Message Request Partial Fill

```
Message Type: RDS          Event Type: O13
MESSAGE HEADER:
MSH^~|\&^PSO VISTA PHARM^983~DISPSHR.FO-DISPENSINGSITE.XXX.XX.COM~DNS^PSO EMI PHARM^984
~HOSTSHR.FO-HOSTSITE.XXX.XX.COM~DNS^20160831184209-0500^^RDS~O13^98321390788^T^2
.5.1^^^^^USA
MESSAGE TEXT:
PID^^^1012874783V687896~~~USVHA&&HL70363~NI~VA FACILITY ID&983&L|456011181~~~USS
SA&&HL70363~SS~VA FACILITY ID&983&L|7214285~~~USVHA&&HL70363~PI~VA FACILITY ID&9
83&L^^PSOPATIENT~TWO~OOO~~~~L^LEWIS~~~~~~M^19511118^F^^^""~""~""~""~""~~P~""|~~L
INCOLN~NE~~~N^""^""^""^^""^""^^456011181^^^^LINCOLN NE^^^^^^""^^
ORC^PF^2718916~984~HOSTTSHR.FO-HOSTSITE.XXX.XX.XXX^^^^^^^3160831^520647065~COUPLA
ND~KATHLEEN~M^^^~~~983^
RXO^1^100^^^^^^W~~~983^^^29
NTE^1^L^WAITING
```

RRD^O14 Prescription Refill/Partial Services Response

The 'RRD^O14' message is the response to the 'RDS^O13' message.

The following table defines the data elements required for each of the following segments of the RRD^O14 Prescription Refill/Partial Services Response

Message Header (MSH) segment

Message Acknowledgement (MSH) segment

Patient Identification (PID) segment

Note: The MUMPS code uses BLDPID^PSOTPHL2(DFN,"",.PSORRDAT,.HL,.ERR)' to create the Patient Identification (PID) segment.

Common Order (ORC) segment

RXD Pharmacy/Treatment Dispense Segment

Notes and Comments (NTE) segment

Notes: The Notes and Comments (NTE) segment will be present if the request is for a 'Partial Fill'.

Segment	Piece	Description/Field Name	Data Type
MSH	1	Field Separator	ST
	2	Encoding Characters	ST
	3	Sending Application	HD
	4	Sending Facility	HD
	5	Receiving Application	HD
	6	Receiving Facility	HD
	7	Date/Time of Message	TS
	8	Security	ST
	9	Message Type	CM
	10	Message Control ID	ST
	11	Processing ID	PT
	12	Version ID	ID
	13	Sequence Number	NM
	14	Continuation Pointer	ST
	15	Accept Acknowledgement	ID
	16	Application Acknowledgement	ID
	17	Country Code	ID
	18	Character Set	ID
	19	Principal Language of Messages	CE
MSA	1	Acknowledge Code	ID
	2	Message Control ID	ST
	3	Text Message	W
	4	Expected Sequence Number	NM
	5	Delayed Acknowledgement Type	W
	6	Error Condition	W
	7	Message Waiting Number	NM
	8	Message Waiting Priority	ID
PID	1	Set ID – Patient ID	SI
	2	Patient ID (External ID)	CK

Segment	Piece	Description/Field Name	Data Type
	3	Patient ID (Internal ID)	CK
	4	Alternate Patient ID	CK
	5	Patient Name	PN
	6	Mother's Maiden Name	ST
	7	Date of Birth	TS
	8	Sex	ID
	9	Patient Alias	PN
	10	Race	ID
	11	Patient Address	AD
	12	County Code	ID
	13	Phone Number – Home	TN
	14	Phone Number – Business	TN
	15	Language – Patient	ST
	16	Marital Status	ID
	17	Religion	ID
	18	Patient Account Number	CK
	19	SSN Number – Patient	ST
	20	Driver's Lic Num – Patient	CM
	21	Mother's Identifier	CK
	22	Ethnic Group	ID
	23	Birth Place	ST
	24	Multiple Birth Indicator	ID
	25	Birth Order	NM
	26	Citizenship	ID
	27	Veterans Military Status	CE
ORC	1	Order Control	ID
	2	Placer Order Number	CM
	3	Filler Order Number	CM
	4	Placer Group Number	CM
	5	Order Status	ID
	6	Response Flag	ID
	7	Quantity/Timing	TQ
	8	Parent	CM
	9	Date/Time of Transaction	TS
	10	Entered By	CN
	11	Verified By	CN
	12	Ordering Provider	CN
	13	Enterer's Location	CM
	14	Call Back Phone Number	TN
	15	Order Effective Date/Time	TS
	16	Order Control Code Reason	CE
	17	Entering Organization	CE
	18	Entering Device	CE
	19	Action By	CN
RXD	1		
	2	Dispense/Give Control	CE
	3	Date/Time Dispensed	TS
	4	Actual Dispense Units	CE
	5	Ignored	
	6	Ignored	
	7	Prescription Number	ST
	8	Number of Refills Remaining	NM
	9	Ignored	
	10	Dispensing Provider	XCN

Segment	Piece	Description/Field Name	Data Type
	11	Ignored	
	12	Total Daily Dose	CQ
NTE	1	Set ID – NTE	SI
	2	Source of Comment	ID
	3	Comment	FT
	4	Comment Type	CE

OneVA Pharmacy Messaging Exceptions

With this integrated VistA patch, several points of failure could occur. The systems design will allow the process to continue if any of the various integration points fail, however, remote prescriptions will not display to the Pharmacist on the Medication Profile view.

There are application error messages that will display during the search for the patient and the patient's prescriptions. They are:

- No patient error message:
  PATIENT IDENTIFIER NOT FOUND
- Multiple patients returned error messages:
  MORE THAN ONE PATIENT RETURNED IN CALL TO HDR-CDS
  MORE THAN ONE PATIENT FOUND ON RX DATABASE, CHECK ICN
- Patient returned, no prescription data returned error message:
  PATIENT FOUND WITH NO PRESCRIPTION RECORDS
- Patient returned, no prescription data matching filters returned error message:
  PATIENT FOUND WITH NO PRESCRIPTION RECORDS MATCHING SEARCH CRITERIA
- Call to HDR/CDS Repository Failed
  THE RX DATABASE IS NOT RESPONDING TO THE REQUEST
- HDR/CDS Repository Reports a Failure
  THE RX DATABASE RESPONDED WITH AN ERROR
- HL7 from VistA does not pass basic validation with a middleware application
  Response Type: ACK
  MSA-01: CR
  MSA-03: {MESSAGE INDICATING INVALID DATA}

(This page included for two-sided copying.)

Appendix G: Inbound ePrescribing (IEP)

Inbound ePrescribing Process Flow

A high-level overview of the Inbound ePrescribing (IEP) process flow for pharmacy data messages is outlined in Figure 5 below.

The IEP process flow depicts five (5) swim-lanes – one external to IEP (External Provider) and four (4) Inbound eR_x processing tiers (Change Healthcare, Data Access Service (DAS), eR_x Processing Hub and VistA Outpatient Pharmacy [OP]):

- External Provider:
    - External physicians (outside of the VA) who, with the use of a third party Electronic Medical Record (EMR) software, issue a prescription for a Veteran
    - The EMR system is registered with SureScripts and/or Change Healthcare and is responsible for creating and sending the eR_x in NCPDP 10.6 XML format
    - The External Provider is registered with SureScripts and/or Change Healthcare and their provider information (e.g., National Provider Identification [NPI] number) is known and verified by Change Healthcare
- Change Healthcare:
    - Serves as proxy for all messages between the External Providers and the VA infrastructure (i.e., the DAS/eR_x Processing Hub)
    - Supports and validates NCPDP 10.6 XML format and structure
- Data Access Services (DAS):
    - Serves as secured-layer gateway/proxy for all messages (in NCPDP 10.6 XML format) between Change Healthcare and the eR_x Processing Hub
- eR_x Processing Hub:
    - Receives, persists, validates, manipulates, and sends NCPDP 10.6 XML messages
    - Validates designated pharmacy from NCPDP 10.6 XML message and match to VistA OP instance
    - Performs auto-validation and matching (including patient, enrollment/registration, provider, drug)
    - Sends prescription data to VistA eR_x Holding Queue.
    - Maintains processing statuses and errors
    - Provides administrative user interface (UI) to track, enable/disable transmission, and run reports

- VistA Outpatient Pharmacy (OP)
    - Provides VistA UI for pharmacy users (manual steps, review and validate patient, provider, and drug/SIG)
    - Processes ePrescription (eR_x) Holding Queue transactions. Once the eR_x is validated, it is processed into the PENDING OUTPATIENT ORDERS (#52.41) file

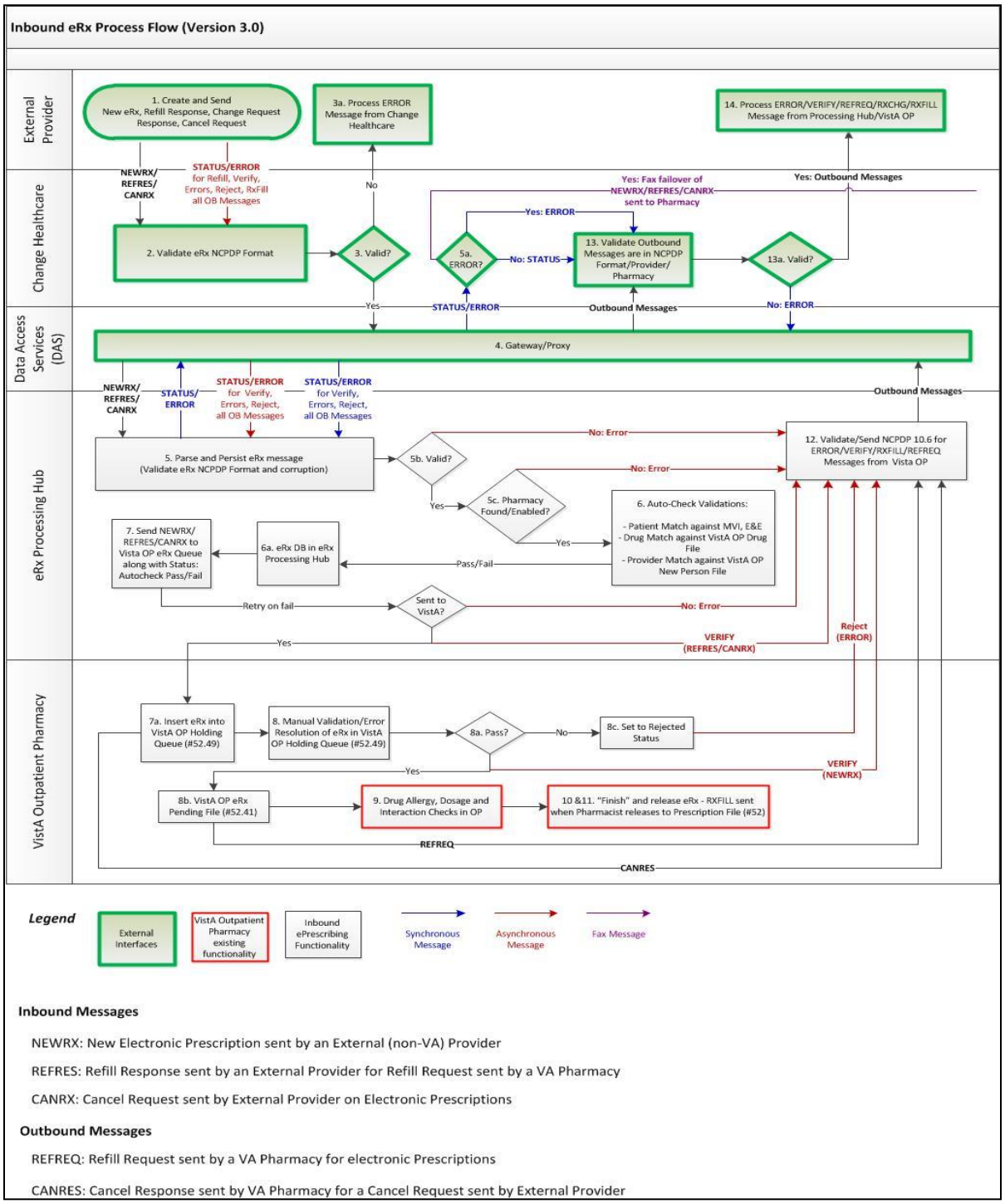

Figure 5: Inbound ePrescribing Process Flow (Version 3.0)

The Inbound eR_x processing flow is sequential in nature as depicted in Figure 5 (above):

- Step 1: The Inbound eR_x process flow begins with the External Provider, using their EMR system, creates and sends to Change Healthcare eR_x message data in NCPDP 10.6 XML format. EMR Systems could also send via SureScripts, which are routed then through Change Healthcare.

- Step 2: In Change Healthcare, the eR_x message is validated against the NCPDP 10.6 format to ensure that the message is in valid construct without any corruption.

- Step 3: If the message is valid, Change Healthcare routes the message to the VA infrastructure via DAS for further processing.

    - Step 3a: If the eR_x message is invalid, an Error message is sent back to the External Provider (as per the NCPDP 10.6 specifications) without sending the message to VA.

- Step 4: DAS proxies the message to the eR_x Processing Hub.

- Step 5: The eR_x Processing Hub validates the NCPDP XML 10.6 format to ensure that the message is in a valid construct without any corruption and stores the message; the message is recorded in a transaction/processing table, which tracks the processing status of the message, as well as coordinates auto-validations and the synchronization with the VistA OP instance.

- Step 6: The eR_x Processing Hub performs patient, provider and drug/SIG auto-validations. The prescription record is updated to capture the auto-validation results – passed/failed.

- Step 7: The eR_x Processing Hub constructs the eR_x data into the format of the eRx Holding Queue and sends to the respective VistA OP. The eRx system utilizes the NPI Institution in the Outpatient site file (#59) to identify the eRx institution. The institution identified as the NPI Institution is a pointer to the Institution file (#4). The NPI value for this NPI Institution in the Institution file (#4) is used to map the eR_x.

- Step 8: In the respective VistA OP instance, pharmacy personnel perform manual validation of the eR_x (e.g., patient match, drug match, etc.).

- Step 9: Once all the validations are completed successfully, the prescription is fulfilled in VistA OP based on the existing fulfillment routines.

NOTE: Change Healthcare validates all messages received back from eRx Processing Hub against the NCPDP 10.6 format to ensure that the message is in valid construct without any corruption, and sends it to the External Provider. The Inbound eR_x process flow ends with the External Provider receiving the message update from VA. In some cases, some of the EMR's send Status messages back to the Hub upon successful receipt of messages from VA.

Inbound ePrescribing Protocols

Inbound ePrescribing adds the following new protocols to facilitate the Inbound ePrescribing processing.

PSO ERX ACCEPT ERX
PSO ERX ACCEPT VALIDATION
PSO ERX ACKNOWLEDGE

PSO ERX ADD COMMENT
PSO ERX DISPLAY MENU
PSO ERX EDIT
PSO ERX HIDDEN ACTIONS
PSO ERX HOLD
PSO ERX HQ MENU
PSO ERX HQ SEARCH
PSO ERX HQ SELECT
PSO ERX HQ SORT
PSO ERX JUMP TO OP
PSO ERX OP PRINT
PSO ERX MESSAGE VIEW
PSO ERX PCV MENU
PSO ERX PCV MESSAGE VIEW
PSO ERX PCV SEARCH QUEUE
PSO ERX PCV SELECT BY NUMBER
PSO ERX PCV SELECT PATIENT
PSO ERX PCV SORT ENTRIES
PSO ERX PRINT
PSO ERX REFILL REQUEST
PSO ERX REJECT
PSO ERX REMOVE
PSO ERX SELECT BY NUMBER
PSO ERX SINGLE REFILL REQUEST
PSO ERX STATUS HISTORY
PSO ERX UNHOLD
PSO ERX VALIDATE DRUG
PSO ERX VALIDATE PATIENT
PSO ERX VALIDATE PROVDIER
PSO ERX VALIDATION MENU
PSO HIDDEN ACTIONS
PSO HIDDEN ACTIONS #3
PSO LM HIDDEN OTHER
PSO LM HIDDEN OTHER #2

Inbound ePrescribing Remote Procedures

Inbound ePrescribing added the following new remote procedures to facilitate the Inbound ePrescribing messaging:

PSOERXA0 DRGMTCH: Drug matching logic
PSOERXA0 PRVMTCH: Provider match logic
PSOERXA1 INCERX: Read and file incoming eRx (XML message)

Inbound ePrescribing Menu Option

A new VistA option has been created that allows a pharmacist to view all inbound eRxs, validate patient, provider, and drug/SIG information, and ultimately, accept the eRx for sending to PENDING OUTPATIENT ORDERS file (#52.41). This menu is Complete Orders from eRx [PSO ERX FINISH]and is found on the Rx (Prescriptions) [PSO RX] menu.

Inbound ePrescribing Holding Queue File (File #52.49)

A new VistA Inbound eRx Holding Queue (ERX HOLDING QUEUE FILE #52.49) was created that holds all of the prescription information received on an eRx from an external provider. New Remote Procedures (RPC) were created within the OP package to accept the incoming HealtheVet Web Services Client (HWSC) messages (e.g., PSOERXA0 DRGMTCH, PSOERXA0 PRVMTCH, PSOERXA1 INCERX, etc.), which contains all of the needed elements for a prescription from a non-VA medical facility. Using the inbound HWSC message, a new entry is placed in the eRx Holding Queue file.

The Inbound eRx Holding Queue uses List Manager for user interaction. The Inbound eRx Holding Queue lists all eRxs received from external providers, with extended options available for users to view all of the details about the prescriptions. Additional extended options were created to allow the pharmacist to validate patient, provider, and drug/SIG information.

ERX Holding Queue File #52.49

```
.01          ERX HUB ID
.02          RELATED OR PARENT MESSAGE ID
.03          MESSAGE DATE/TIME
.04          EXTERNAL PATIENT IDENTIFIER
.05          VISTA PATIENT
.06          INSTITUTION
.07          PHARMACY SYSTEM
.08          MESSAGE TYPE
.09          EXTERNAL/PROVIDER ORDER NUMBER
.1           VISTA PENDING OUTPATIENT ORDER
.12          OE/RR ORDER NUMBER
.13          PHARMACY PRESCRIPTION NUMBER
.14          RELATES TO HUB ID
1            ERX ORDER STATUS
1.11         DRUG VALIDATED BY
1.12         DRUG VALIDATED DATE/TIME
1.13         PATIENT VALIDATED BY
1.14         PATIENT VALIDATED DATE/TIME
1.2          PROV STAT (AUTO VALIDATION)
1.3          PROV STAT (MANUAL VALIDATION)
1.4          DRUG STAT (AUTO VALIDATION)
1.5          DRUG STAT (MANUAL VALIDATION)
1.6          PATIENT STATUS (AUTO VAL)
1.7          PATIENT STATUS (MANUAL VAL)
1.8          PROVIDER VALIDATED BY
1.9          PROVIDER VALIDATED DATE/TIME
2.1          EXTERNAL PROVIDER
2.2          EXTERNAL PHARMACIST
2.3          VA MATCHED PROVIDER
```

2.4	TO/FROM QUALIFIER
2.5	ERX EXTERNAL PHARMACY
2.6	ERX EXTERNAL SUPERVISOR
3.1	EXTERNAL DRUG/SUPPLY
3.2	MATCHED DRUG/SUPPLY
4.1	PRODUCT CODE
4.11	DRUG DB CODE QUALIFIER
4.2	PRODUCT CODE QUALIFIER
4.3	STRENGTH
4.4	DRUG DB CODE
4.5	FORM SOURCE CODE
4.6	FORM CODE
4.7	STRENGTH SOURCE CODE
4.8	STRENGTH CODE
4.9	DEA SCHEDULE
5.1	QUANTITY
5.2	CODE LIST QUALIFIER
5.3	UNIT SOURCE CODE
5.4	POTENCY UNIT CODE
5.5	DAYS SUPPLY
5.6	REFILLS
5.7	REFILL QUALIFIER
5.8	SUBSTITUTIONS
5.9	WRITTEN DATE
6.1	LAST FILL DATE
6.2	EXPIRATION DATE
6.3	EFFECTIVE DATE
6.4	PERIOD END
6.5	DELIVERED ON DATE
6.6	DATE VALIDATED
7	DIRECTIONS
8	NOTES
9	DIAGNOSIS
10.2	PRIOR AUTHORIZATION
10.3	PRIOR AUTHORIZATION QUALIFIER
10.4	PRIOR AUTHORIZATION STATUS
10.5	DO NOT FILL
10.6	NEEDED NO LATER THAN
10.7	TIMEZONE
10.8	TIME ZONE DIFFERENCE QUANTITY
10.9	NEEDED NO LATER THAN REASON
11	STRUCTURED SIG
12	ORDER CHECKS
13.1	PATIENT FACILITY UNIT
13.2	BED
13.3	ROOM
14	OBSERVATION
15	OBSERVATION NOTES
16	DRUG USE EVALUATION
17.1	EXTERNAL PHARMACY
17.2	EXTERNAL PHARMACIST
17.3	TRANSFERRED TO VA PHARMACY
17.4	XFER TO EXTERNAL PHARMACY
18	PAYER INFORMATION
19	STATUS HISTORY

20.1	VISTA QUANTITY
20.2	VISTA DAYS SUPPLY
20.3	VISTA VERB
20.4	VISTA ROUTING
20.5	VISTA REFILLS
20.6	VISTA CLINIC
21	QUANTITY/TIMING
22.1	FROM
22.2	FROM QUALIFIER
22.3	TO
22.4	TO QUALIFIER
22.5	CH SENT DATE/TIME
24.1	RELATED INSTITUTION
24.2	DIVISION
24.3	SENDER SECONDARY ID
24.4	SENDER TERTIARY ID
24.5	RECEIVER SECONDARY ID
24.6	RECEIVER TERTIARY ID
25	CH MESSAGE ID
25.2	PENDING OUTPATIENT ORDER#
26	VA DISPENSING INSTRUCTIONS
27	VA PATIENT INSTRUCTIONS
28	DRUG COVERAGE STATUS
30	VA PROVIDER COMMENTS
31	VA UNEXPANDED SIG
41	EXTERNAL FORM CODE
42	EXTERNAL POTENCY UNIT CODE
43	EXTERNAL STRENTH CODE
44	PAYER CARDHOLDER ID CONVERTED?
49	MEDICATION DISPENSED/REQUESTED
50	REQUEST/RESPONSE COMMENTS
50.1	NOTE ADDED BY
50.2	NOTE DATE/TIME
51.1	REFILL/CANCEL REQEUST PERSON
51.2	# OF REFILLS REQUESTED
52.1	RESPONSE VALUE
52.2	RESPONSE NOTE
52.3	RESPONSE REFERENCE NUMBER
53	RESPONSE NOTE
55	RESPONSE CODES
60	REQUEST/RESPONSE ERROR TEXT
60.1	REQUEST/RESPONSE ERROR CODE
61	REQUEST/RESPONSE ERR DCODES
70.1	FACILITY NAME
70.2	FACILITY ADDRESS LINE 1
70.3	FACILITY ADDRESS LINE 2
70.4	FACILITY CITY
70.5	FACILITY STATE
70.6	FACILITY ZIP CODE
70.7	PLACE LOCATION QUALIFIER
71	FACILITY IDENTIFICATION
72	COMMUNICATION
80.1	CHANGE REQUEST TYPE
80.2	RETURN RECEIPT
80.3	REQUEST REFERENCE NUMBER

```
80.4          CHANGE RX STATUS FLAG
80.5          CHANGE/CANCEL DENIED BY HUB
100           PROCESSING ERRORS
201           MESSAGE HISTORY
```

Inbound ePrescribing External Patient File (File #52.46)

The ERX External Patient File #52.46 stores patient information from each incoming eRx.

ERX External Patient File #52.46

```
.01           NAME
.02           LAST NAME
.03           FIRST NAME
.04           MIDDLE NAME
.05           SUFFIX
.06           PREFIX
.07           GENDER
.08           DATE OF BIRTH
.09           ERX EXTERNAL PHARMACY
1.1           FILE ID
1.2           MEDICAL RECORD ID #
1.3           ACCOUNT NUMBER
1.4           SSN
1.5           LINKED VISTA PATIENT
1.6           PLACE/LOCATION QUALIFIER
1.7           PATIENT RELATIONSHIP
2             COMMUNICATION
3.1           ADDRESS LINE 1
3.2           ADDRESS LINE 2
3.3           CITY
3.4           STATE
3.5           ZIP CODE
5             IDENTIFICATION
6             LAST LOCKED BY
```

Inbound ePrescribing External Pharmacy File (#52.47)

The ERX External Pharmacy File #52.47 is a sub-file that holds the identification elements passed in with the incoming eRx on pharmacy information.

ERX External Pharmacy File #52.47

```
.01           NAME
.02           NCPDP ID
.03           NPI
.04           DEA NUMBER
.05           STORE NAME
1.1           ADDRESS LINE 1
1.2           ADDRESS LINE 2
1.3           CITY
1.4           STATE
1.5           ZIP
1.6           TYPE
1.7           PLACE/LOCATION QUALIFIER
```

```
1.8          SPECIALTY
2            IDENTIFICATION
3            COMMUNICATION
4            ASSOCIATED ERX PERSON
```

Inbound ePrescribing External Person (File #52.48)

The ERX External Person File #52.48 stores external provider information from the incoming new eRx. Each provider record is unique based on a combination of parameters.

ERX External Person File #52.48

```
.01          NAME
.02          LAST NAME
.03          FIRST NAME
.04          MIDDLE NAME
.05          SUFFIX
.06          PREFIX
1.1          PERSON TYPE
1.2          SPECIALTY
1.3          ASSOCIATED ERX PHARMACY
1.4          NCPDP ID
1.5          NPI
1.6          DEA #
1.7          HIN
1.8          STATE LICENSE NUMBER
2.1          CLINIC NAME
2.2          PLACE/LOCATION QUALIFIER
3            COMMUNICATION
4.1          STREET ADDRESS LINE 1
4.2          ADDRESS LINE 2
4.3          CITY
4.4          STATE
4.5          ZIP CODE
5.1          AGENT LAST NAME
5.2          AGENT FIRST NAME
5.3          AGENT MIDDLE NAME
5.4          AGENT SUFFIX
5.5          AGENT PREFIX
6            IDENTIFICATION
```

Inbound ePrescribing Service Reason Codes (File #52.45)

The ERX Service Reason Codes File #52.45 stores the Service Reason Codes and their corresponding translations.

ERX SERVICE REASON CODES (#52.45)

```
.001         NUMBER
.01          SERVICE REASON CODE
.02          BRIEF DESCRIPTION
```

```
.03          CODE TYPE
1            FULL DESCRIPTION
```

Outpatient Pharmacy PRESCRIPTION FILE (File #52)

```
PRESCRIPTION (#52)         ACTIVITY LOG SUB-FILE (#52.3)
                           REASON (#.02)
```

Outpatient Pharmacy OUTPATIENT SITE (File #59)

```
OUTPATIENT SITE (#59)      ERX DEFAULT LOOKBACK DAYS
                           (#10.2)
```

Inbound ePrescribing New Field in Existing File

A new field for a VA site's default eRx clinic (ERX LOOKBACK DAYS #10.2) was added to the Outpatient Site File #59 and is also released as part of the VistA patch for Inbound ePrescribing.

(This page included for two-sided copying.)

Index

A

Active VHIC Numbers Added to PID-4 Segment Interoperability between DoD and VA, 63
Archiving and Purging, 22

B

Barcodes and Label Printer Support, 45
Barcodes on Dot Matrix Printers, 45

C

Callable Routines, 23
Communication Protocol, 61
Control Code Entries, Samples, 49
Control Codes in use by Laser Labels, 52

D

Data Base Integration Agreements, 27
Data South 220, 47
Dot Matrix Labels, 46
Dot Matrix Printers and Barcodes, 45

E

Electronic Signatures, 32
Exported Options, 19
External Interfaces, 23
External Relations, 26

F

Field Rules, 60
File Security, 34
Files, 11

G

General Information, 59
Genicom 4440, 47
Genicom 4490, 48

H

Hardware Setup, Laser Label Printers, 48
HL7 Messaging with an External System, 79
HL7 Order Message Segment Definition Table, 80

I

Implementation and Maintenance, 5
Inbound ePrescribing (IEP), 146
Inbound ePrescribing External Patient File (File #52.46), 153
Inbound ePrescribing External Person (File #52.48), 154
Inbound ePrescribing External Pharmacy File (#52.47), 153
Inbound ePrescribing Holding Queue File (File #52.49), 150
Inbound ePrescribing New Menu Option, 150
Inbound ePrescribing Process Flow, 146
Inbound ePrescribing Protocols, 148
Inbound ePrescribing Remote Procedures, 149
Inbound ePrescribing Service Reason Codes (File #52.45), 154, 155
Interfacing, 32
Internal Relations, 28
Introduction, 1

J

Journaling Globals, 45

L

Label Printer Support, 45
Laser Label Control Codes, 52
Laser Label Printers, 48
Laser Label Printers, Hardware Setup, 48

M

M Audiofax (Telephone Refill Requests), 8
Mail Group Setup for the HL7 External Interface, 8, 32
Menu Assignments, 19, 32
Menu Diagrams, 36
Message Rules, 59
MT290, 47
MT-661, 47

N

New Label Stock (Version 6.0 and Later Versions), 46

O

OneVA Pharmacy Component Diagram, 131
OneVA Pharmacy General Information, 127
OneVA Pharmacy HL7 Message Types, 134
OneVA Pharmacy HL7 Messaging using eMI for External System, 127
OneVA Pharmacy Messaging Exceptions, 144
OneVA Pharmacy Modified Protocols, 129
OneVA Pharmacy New Application Parameters, 130
OneVA Pharmacy New File, 130
OneVA Pharmacy New Flag, 128
OneVA Pharmacy New Logical Link, 128
OneVA Pharmacy New Menu, 128
OneVA Pharmacy New Protocols, 129
Online Documentation, 3

Options to be Deleted during Installation, 6
Order Messaging Exceptions, 83
Orientation, 3
OTC 560, 48
Outpatient Pharmacy ASAP Standard for Prescription Monitoring Programs, 106
Outpatient Pharmacy Files, 11
Outpatient Pharmacy HL7 Interface Dispense Completion VHIC added to PID-4, 75
Outpatient Pharmacy HL7 Interface Dispense Release Date/Time Request VHIC added to PID-4, 73
Outpatient Pharmacy HL7 Interface Dispense Request separate drug warning narrative in NTE segment, 65, 67
VHIC added to PID-4, 64
Outpatient Pharmacy HL7 Interface Specifications, 59
Outpatient Pharmacy Manager Menu, 36
Outpatient Pharmacy V. 7.0 Menu Diagrams, 36

P

Package Security, 21
Package-Wide Variables, 28
Pharmacist Menu, 41
Pharmacy Technician's Menu, 42
Print Queue Setup, VMS, 51
Processing Rules, 61

Q

QBP^Q13 Query by Parameter Request, 134
Queue Background Jobs, 9

R

RDS^O13 Pharmacy/Treatment Dispense Message Request, 139
Related Manuals, 3
Resource Requirements, 5
Routine List, 14
Routines to be Deleted during Installation, 7
RRD^O14 Prescription Refill/Partial Services Response, 141
RTB^K13 Prescription Query Service Reponses, 135

S

ScripTalk® Printers, 53
Security Keys, 19, 32
Segment Rules, 59
Setting up the Archive Device, 22
Setting up the Bingo Board Device, 8
Setting Up the Interface, 24
Shutting Down the Interface, 24
Software Product Security, 32
Specific Transaction, 62, 75
SPMP Data Source PSO*7*408, 109
Standalone Options, 42
State Prescription Drug Monitoring Program SUMPM Patch*7*408, 107
Steps for Setup/Shutdown of the External Interface, 23

T

Telephone Refill Requests, 8
Templates, 30
Templates to be Deleted during Installation, 7
Transaction Specifications, 61

U

Using the Maintenance Menu, 8

V

Veteran's Health Information Card (VHIC) Interoperability between DoD and VA, 63
View of Queue Background Jobs Screen, 10
VMS Print Queue Setup, 51
VUID, 89